JUNE/JULY 1991

AN ARGUS SPECIALIST PUBLICATION

£2.50

MODEL ENGINEERS' WORKSHOP

FREE PULL OUT DRAWING
ML7 clutch – built on the lathe

SQUARE STOCK COLLETS

BUILT-UP LATHE STEADIES

STAY ON CENTRE
Accurate tool setter

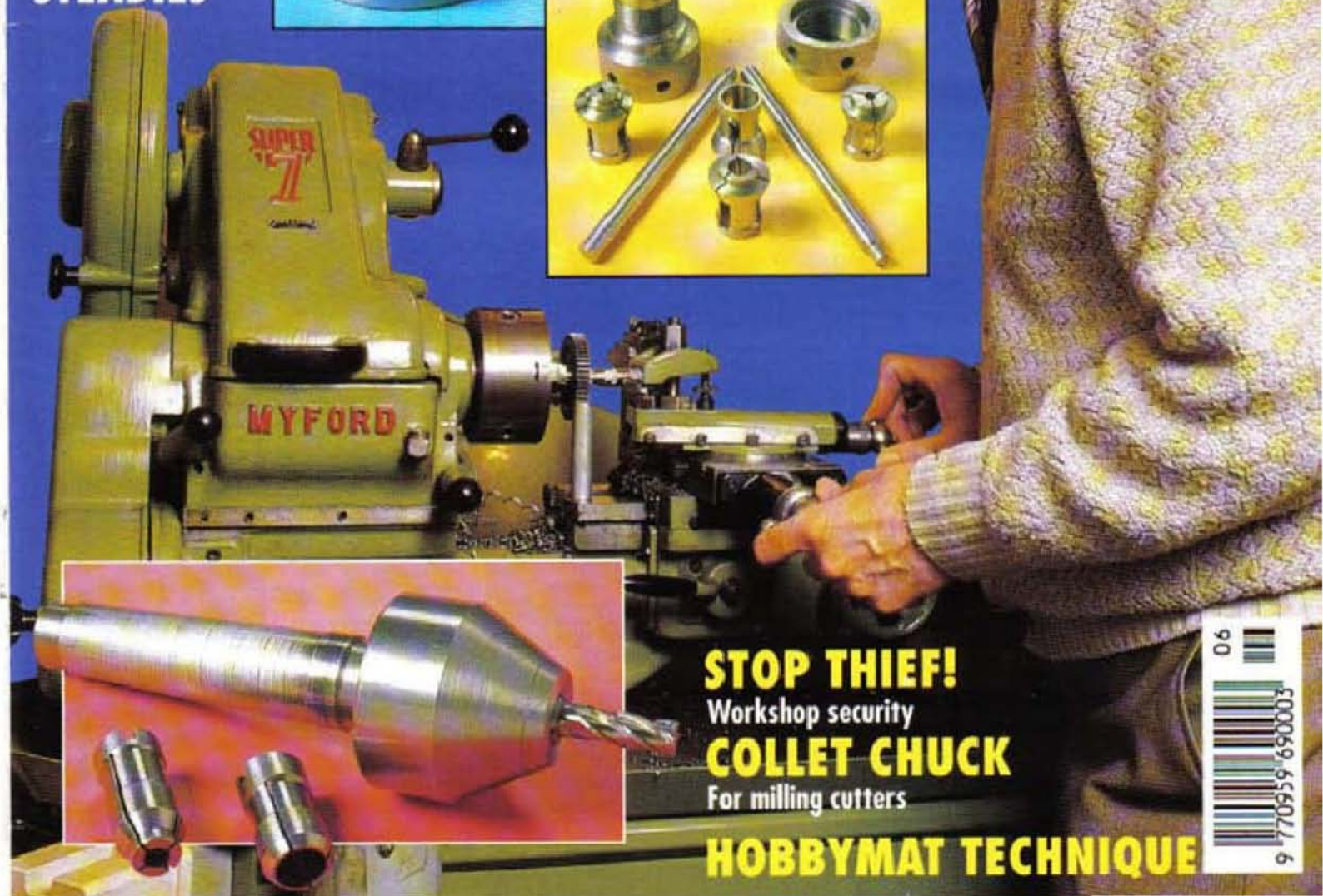

STOP THIEF!
Workshop security

COLLET CHUCK
For milling cutters

HOBBYMAT TECHNIQUE

SOMETHING TO LOOK FORWARD TO...

...every fortnight

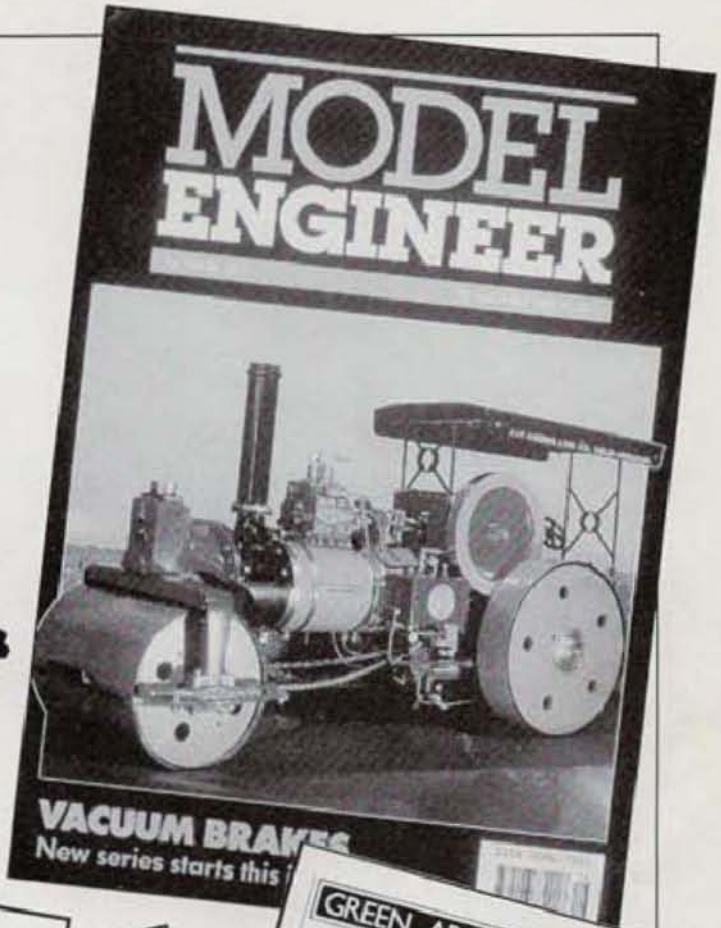

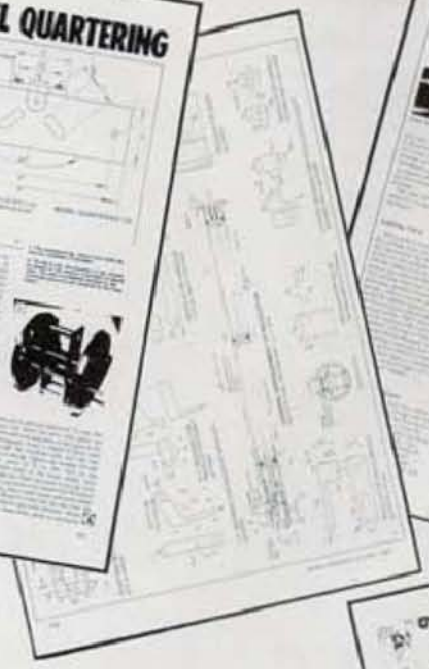

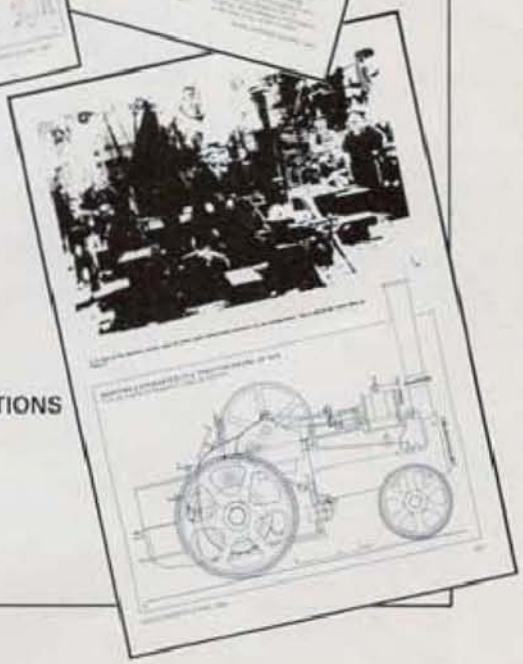

There's something to anticipate twice every month in fascinating Model Engineer magazine! Whether your interests lie in live steam locomotive models, traction engines, internal combustion motors or stationary engines, world famous M.E. will inspire, instruct, advise and encourage. Model Engineer is published on the first and third Fridays each month and costs just £1.40 from all good newsagents; alternatively, you may care to ensure your regular copies through an annual subscription – a mere £33.60 for UK readers (overseas rates and airmail details on request).

AN Argus SPECIALIST PUBLICATION

ARGUS SPECIALIST PUBLICATIONS
Argus House,
Boundary Way,
Hemel Hempstead,
Hertfordshire,
HP2 7ST
Tel: 0442 66551

MODEL ENGINEERS' WORKSHOP

EDITORIAL
EDITOR: Stan Bray
CONSULTING EDITOR: Ted Jolliffe

CREATIVE
ART EDITOR: Peter Kirby
DESIGNER: Ian Houston

ADVERTISEMENT SALES
ADVERTISEMENT MANAGER: Kaye Ellis
CLASSIFIED AD SALES: Steve Seward
ADVERTISEMENT COPY CONTROL: Eileen Wheeler

MANAGEMENT
MANAGING DIRECTOR: Terry Pattisson
CIRCULATION & PROMOTIONS: Debra Stupple
PRODUCTION: Tony Dowdeswell
GROUP EDITOR: Alec Gee
GROUP ADVERTISEMENT MANAGER: Paul D'Inverno

The publishers cannot accept responsibility for unsolicited material. The contents of Model Engineers' Workshop including all articles, designs, plans and photographs and all copyright and other intellectual property right therein belong to Argus Specialist Publications. All rights conferred by the Law of Copyright and other intellectual property rights and by virtue of international copyright conventions, are specifically reserved to Argus Specialist Publications and any reproduction requires the consent of the Company © Argus Specialist Publications.

SUBSCRIPTIONS: Select Subscriptions Ltd, 5 River Park Estate, Billet Lane, Berkhampsted, Herts HP4 1HL. Tel: (0442) 876661.
6 issues UK £15.00, Europe £18.90, Middle East £19.20, Far East £21.10, Rest of World £20.30 or US$38.00
Airmail rates on request.
USA Subscription Agent: Wise Owl Worldwide Publications, 4314 West 238th Street, Torrance, CAL 90505 USA.

BACK ISSUES: back issues subject to availability from: Select Subscriptions Ltd, 5 River Park Estate, Billet Lane, Berkhampsted, Herts HP4 1HL Tel: (0442) 876661. To avoid disappointment, check availability before placing your order. Each copy costs cover price plus 60p p&p.

BINDERS: £6.80 each (including p&p). Telephone your Access or Barclaycard order through on (0442) 66551.

DISTRIBUTION UK NEWSTRADE: SM Distribution Ltd, 6 Leigham Court Road, Streatham, London SW16 2PG. Telephone 081 677 8111, Telex: 261643, Fax: 081 677 0136
OVERSEAS SALES, UK SPECIALIST RETAIL SALES AND ALL MAGAZINE AVAILABILITY ENQUIRIES: Copy Sales Co-Ordinator, Argus Specialist Publications – see address below – Telephone (0442) 66551.

Model Engineers' Workshop is printed in the UK by Chase Wells, Plymouth with mono and colour origination by Keyboard Komposition Ltd., of Stratford, London.

'Model Engineers' Workshop', Argus Specialist Publications, Argus House, Boundary Way, Hemel Hempstead, Hertfordshire HP2 7ST. (Tel:0442 66551)

AN Argus SPECIALIST PUBLICATION

CONTENTS

7 **FROM THE EDITOR'S BENCH**
Workshop news and developments

8 **FIXED AND TRAVELLING STEADIES**
Supporting slender subjects

14 **A TEE SLOTTED CROSS SLIDE**
Improving a Far Eastern lathe

17 **A RETRACTABLE BALL HANDLE**
Added accessibility

24 **SIMPLE STORAGE UNITS**
From bin to bench!

26 **PARTING ON THE HOBBYMAT**
Inverted tool holding

28 **LATHE TOOL HEIGHT GAUGE**
With micrometer adjustment

32 **SCRAPERS AND SCRAPING**
Recapture a lost art

36 **COLLETS FOR SQUARE MATERIAL**
Workholding aid

38 **SCRIBE A LINE**
Your views and ideas

40 **MILLING CUTTER CHUCK**
Money-saving milling

44 **STOP THIEF!**
Secure that workshop

46 **A DRILLING DEPTH GAUGE**
For repeatable accuracy

48 **A CROSS DRILLING JIG**
A variation on a theme

50 **PARTING TOOL HOLDER**
Simple to make, sturdy in use

52 **TRADE COUNTER**
Commercial items of interest

54 **A CIRCULAR SAW FOR THE CHIPMUNK**
Developing a previous project

60 **CAM-DRIVEN COOLANT PUMP**
For lathe or milling machine

64 **A CLUTCH FOR THE ML-7**
Made on its own machine!

68 **GEOMETRIC CHUCK**
Concluding the construction

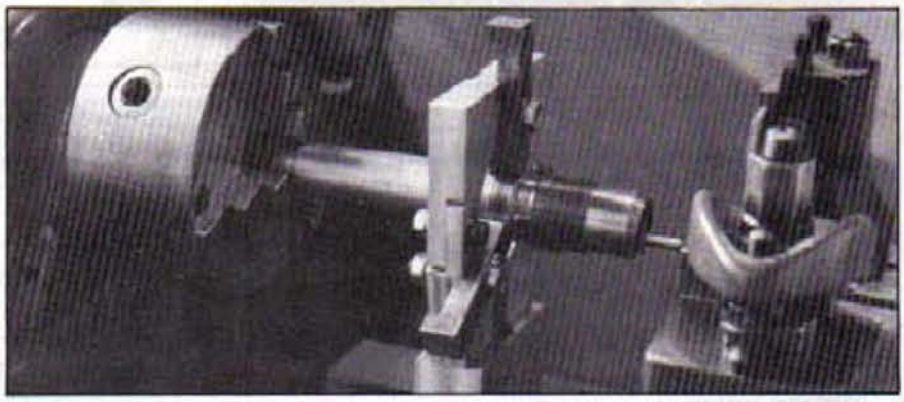

SOMETHING TO LOOK FORWARD TO...

...every fortnight

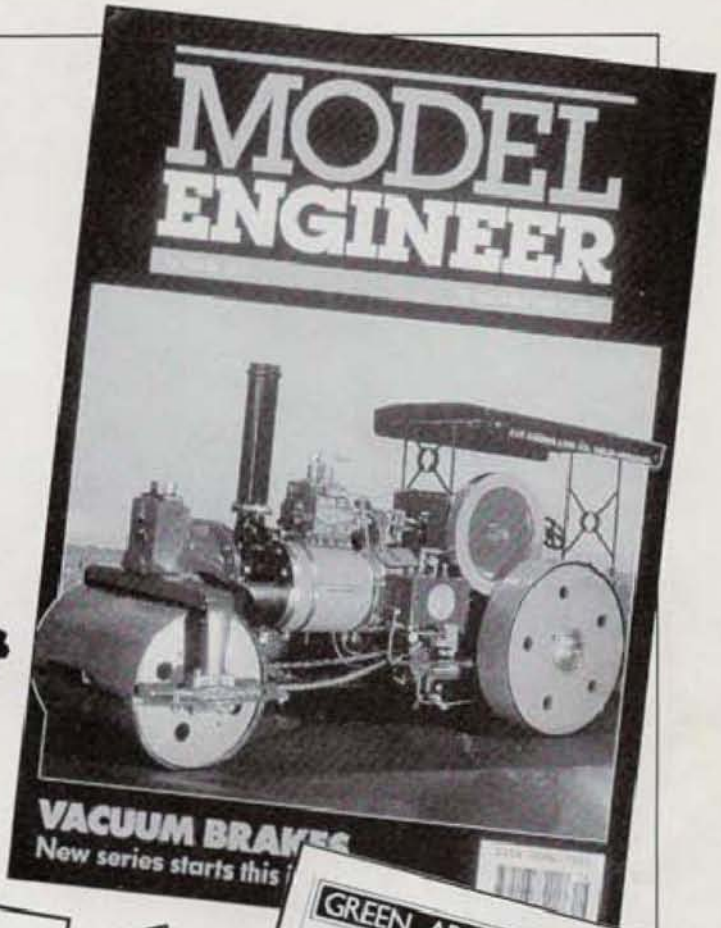

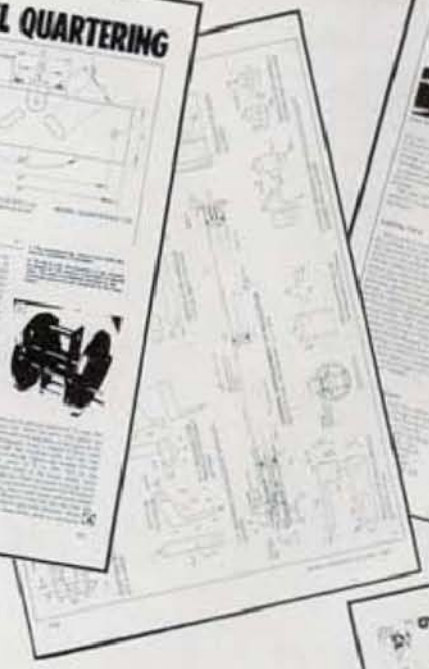

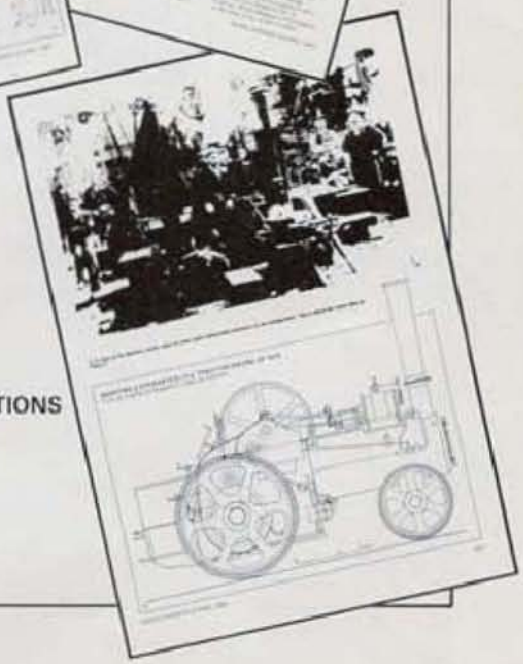

There's something to anticipate twice every month in fascinating Model Engineer magazine! Whether your interests lie in live steam locomotive models, traction engines, internal combustion motors or stationary engines, world famous M.E. will inspire, instruct, advise and encourage. Model Engineer is published on the first and third Fridays each month and costs just £1.40 from all good newsagents; alternatively, you may care to ensure your regular copies through an annual subscription – a mere £33.60 for UK readers (overseas rates and airmail details on request).

AN Argus SPECIALIST PUBLICATION

ARGUS SPECIALIST PUBLICATIONS
Argus House,
Boundary Way,
Hemel Hempstead,
Hertfordshire,
HP2 7ST
Tel: 0442 66551

Stan Bray

ON THE EDITOR'S BENCH

We must start this issue with a couple of apologies. Firstly to Geoff Bartlett who wrote us an excellent instructive and amusing letter. This appeared in *Scribe a Line* but it is doubtful if any readers could make any sense out of it! Readers must wonder how such a mix up can possibly occur when in theory a letter is just being copied. It is not intended that we should bore them with the technical details of what has happened, but as you can see for yourselves it can and does. Our most sincere apologies therefore to Geoff as well as our thanks for him writing to us in the first place, and our apologies too to readers who have puzzled over it for a long while wondering what on earth it was all about. The letter is reproduced in its correct form elsewhere in this issue.

The second apology is to readers who hoped to make the filing machine. Included in the fold-out drawings is a guard. Again for technical reasons this should never have been included in the form it is. Firstly, the drawings are third angle and the guard is first, something spotted by quite a few. Secondly, as shown it is not possible to construct the guard anyway. It is doubtful if anyone really believes they will be able to bend $\frac{3}{8} \times 1\frac{1}{4}$ in. mild steel strip to the shape shown without the benefit of a pretty large press, and we are not in the business of describing work for such a minority. The material should either have been $\frac{3}{8}$ in. $\times 1\frac{1}{4}$ in. mild steel or $\frac{1}{2}$ in. $\times 1\frac{1}{4}$ in. aluminium, which will bend quite easily to the required shape. Likewise, the block on the top which holds the tube; soldering this to the steel arm is not a practical proposition and definitely impossible if it is made of aluminium. As can be seen from the photograph, the block is screwed in place, two 4 BA screws having been used. The tubing used was $\frac{3}{8}$ in. outside diameter, half inch not really giving sufficient room for a file in the event of any slight vibration occurring in the guard.

May we thank all the many people who wrote in regarding the job of assistant which was mentioned. The replies are being sorted out and by the time this is in print will no doubt have been sent out. We would like, however, to urge once again those of you who can offer contributions to send them in. There is, and always will be, a need for suitable material for a magazine such as this, and you might as well share your ideas with others. Whilst we do like to receive these articles typed with double spacing and one inch wide margins, and nice neat drawings with perfect photographs, if the idea is good then it can be written on anything, longhand and with the drawings as brief sketches. The rest can be done at Hemel Hempstead. We can also probably arrange for photographs to be taken for you. It is the quality of the finished product that is important. Oh, and we'll pay you for your efforts – it might buy you a new micrometer or some more metal for that latest project or model!

Finally, we receive a large number of letters from readers asking for assistance. It is always a pleasure to answer these if it is possible to do so. However, PLEASE do include a stamped addressed envelope for a reply, otherwise one cannot be guaranteed.

Having got all that business sorted out, let us take a look at what is on offer in this issue. Plenty of small projects, of course, for filling those odd moments in the workshop. Some simple and basic ideas for the absolute beginner; and for the advanced reader, the conclusion of the Geometric Chuck that is proving very popular. Also there's an absolutely super clutch which, whilst designed for the Myford ML7, has already been adapted for other lathes with plenty of success. In fact, any lathe with a countershaft can have such a clutch if one so wishes.

Once again, then, we hope to have offered everyone something of value. Do not only read the article that you think suits you best – contained in most of them are hints and tips galore on using machinery and on handwork. The method that suits one person will not suit another and it is always worth having a try at another way of doing things!

IN OUR NEXT ISSUE!

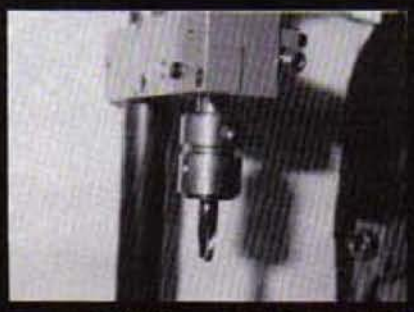

There's plenty to read and do in the August/September issue of MEW. Highlights include:

A COLLET CHUCK FOR THE COMPACT FIVE
A BORING TOOL HOLDER

THREADING EQUIPMENT FOR THE BEGINNER
MORE ABOUT USING GEOMETRIC CHUCKS
A SIMPLE SETTING-UP INDICATOR
A HEAVY DUTY SLOTTING ATTACHMENT
COMPUTER NUMBER CRUNCHING IN THE WORKSHOP
KNURLING DEVICES

A BALL TURNING TOOL
TURNING MORSE TAPERS
A FINGER PLATE
And many more!

(Note: The simple lathe construction article promised for this issue has been held over due to technical difficulties. It will now appear in a later issue.)

Aug/Sept issue on sale July 12th.

FIXED & TRA

The use of a steady for any work which protrudes some way from the chuck is essential. Harold Hall explains here how he made suitable steadies from stock materials at a terrific saving in cost

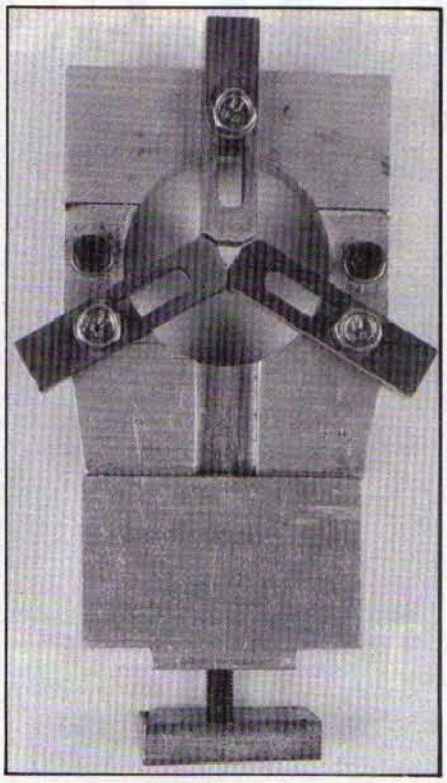

The finished, fully assembled fixed steady unit.

Finding a number of projects impossible or almost impossible without the use of a fixed steady, it was decided that one should be obtained. In view of the cost of a proprietary item, it was decided to make one. Also, whilst it would be much less used (but being considerably simpler to construct), a travelling steady was made at the same time.

A suitable design

The design was established to suit the materials available at the time, and a new constructor may wish to vary the design for the same reason. Similarly, being designed to suit a Myford Super 7 lathe, it will require adapting for other lathes. The material used was aluminium for the three main parts (though steel could also be used) with brass for the arms and steel for the clamp. I find that, being larger sizes, they are not listed in most of the normal model engineers' supplies catalogues, but one company that has them available in steel is G.L.R. Distributors Ltd., Great Northern Works, Hartham Lane, Hertford SG14 1QN. They also list some of the required sizes in aluminium and may be able to supply other sizes not listed (a point which they make in their catalogue) if you prefer to work in aluminium.

The dimensions chosen permit the use of either 2 in. × ½ in. or 3 in. × ½ in. for the body top and bottom, though if the travelling steady is being made, then 3 in. × ½ in. will be required.

Construction

Construction is quite straightforward, the body top and bottom first being made to **Figures 1** and **2**. The holes in the bottom being drilled through the top to ensure alignment and then assembled

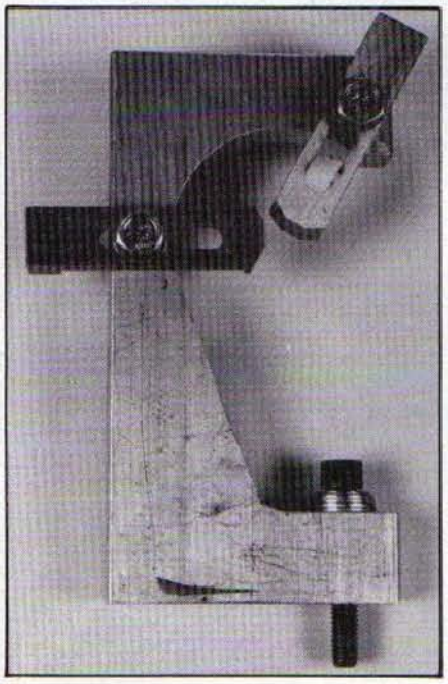

Simple construction of the travelling steady is apparent here.

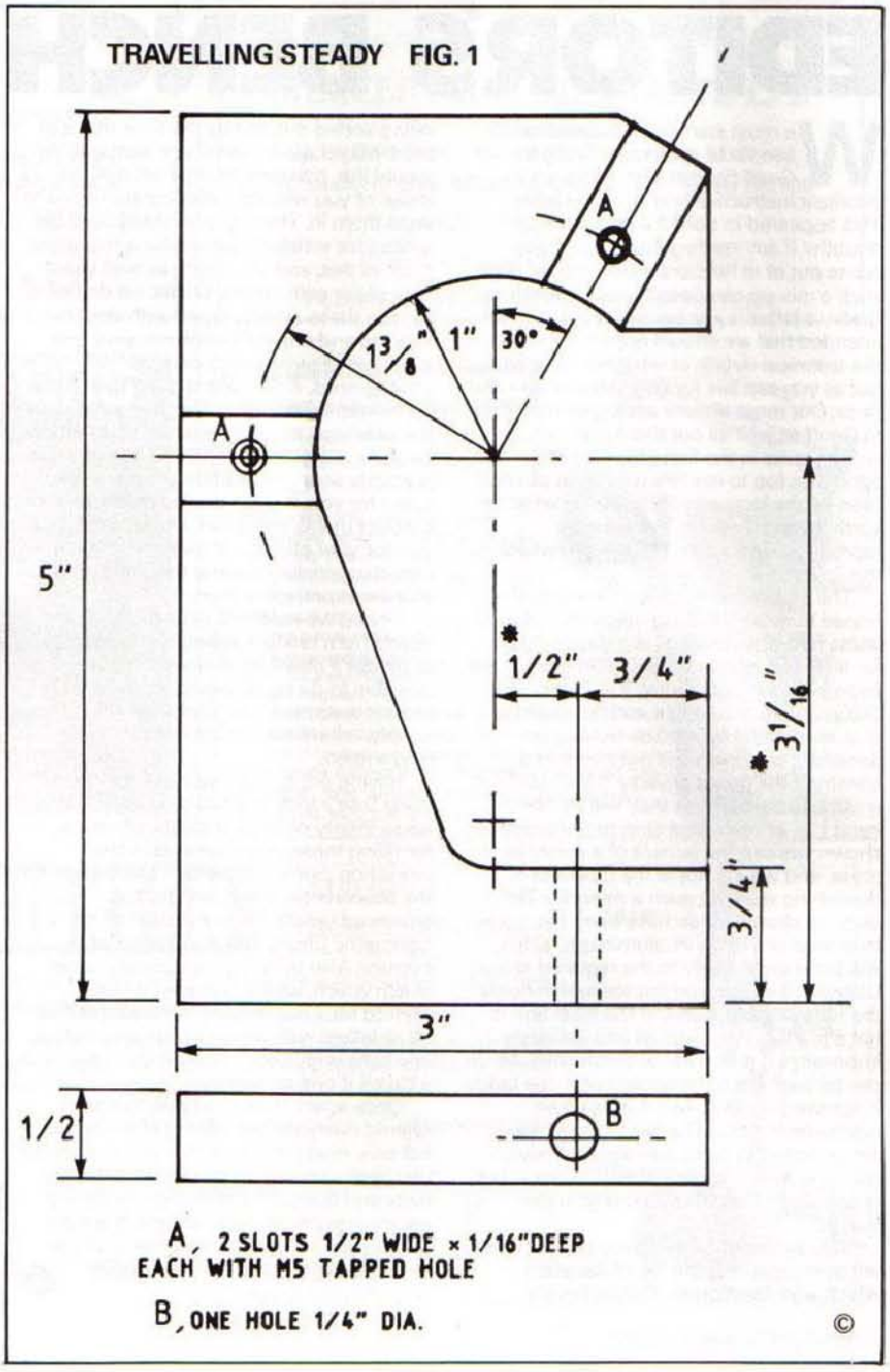

VELLING STEADIES

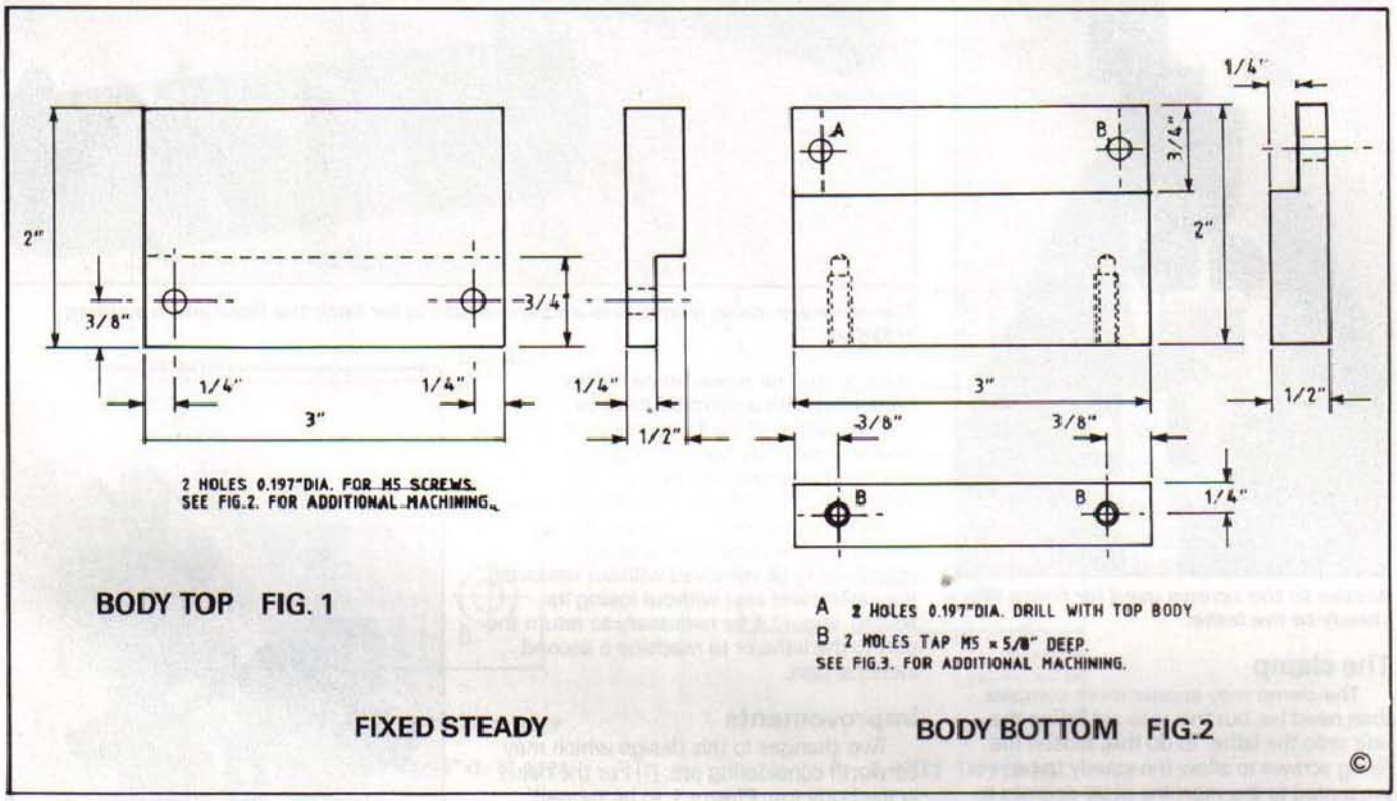

before final machining as per **Figure 3**. The large hole can be machined with the parts assembled and mounted on the faceplate.

The slots 'A' for locating the arms are on one side only; ensure the side is chosen which avoids machining across the join between the two parts. The deeper slots at the bottom are on both sides to give access to the socket head screws for tightening the steady onto the machine.

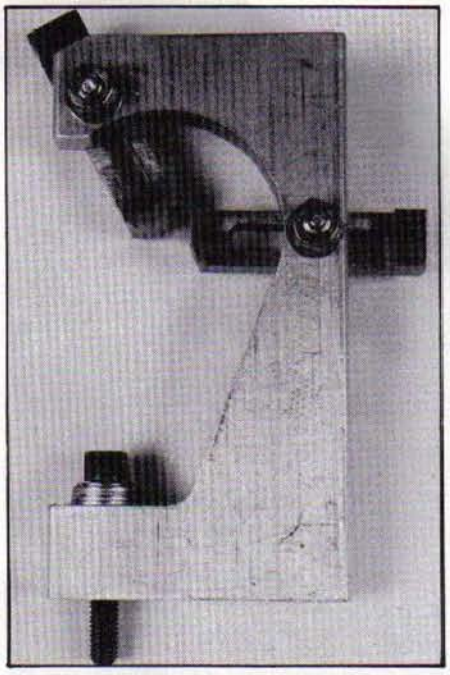

The travelling steady seen from the opposite side.

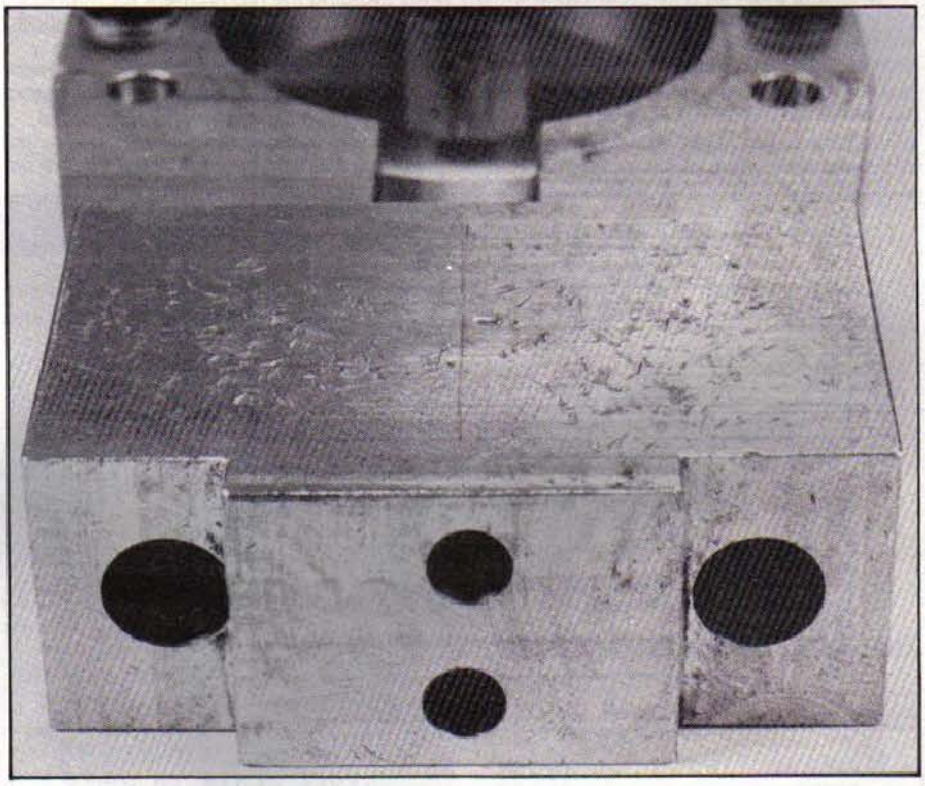

The base of the fixed steady, viewed from below but without the clamp bar fitted.

The base

The base should present no problem, but note that the depth of the counterbores are to suit M5 ×50 long screws. These may also be available from G.L.R. Distributors Ltd., but other lengths could be accommodated by modifying the depth of counterbore to suit.

The arms will suit both steadies. Three are required for the fixed steady which could also be used for the travelling steady, otherwise five will need to be made.

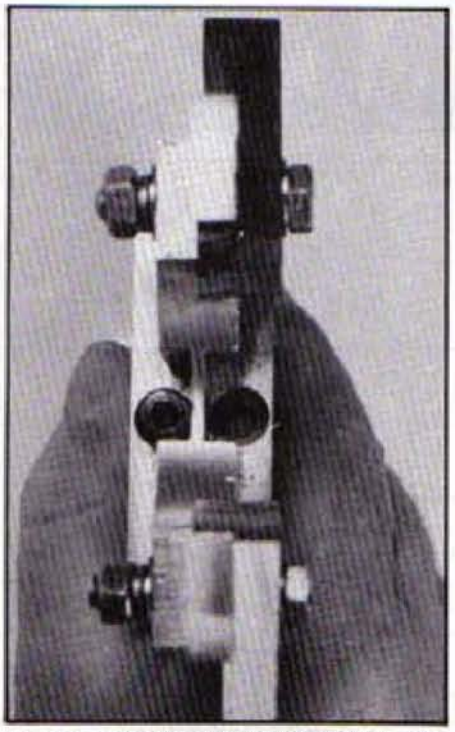

Access to the screws used for fixing the steady to the lathe.

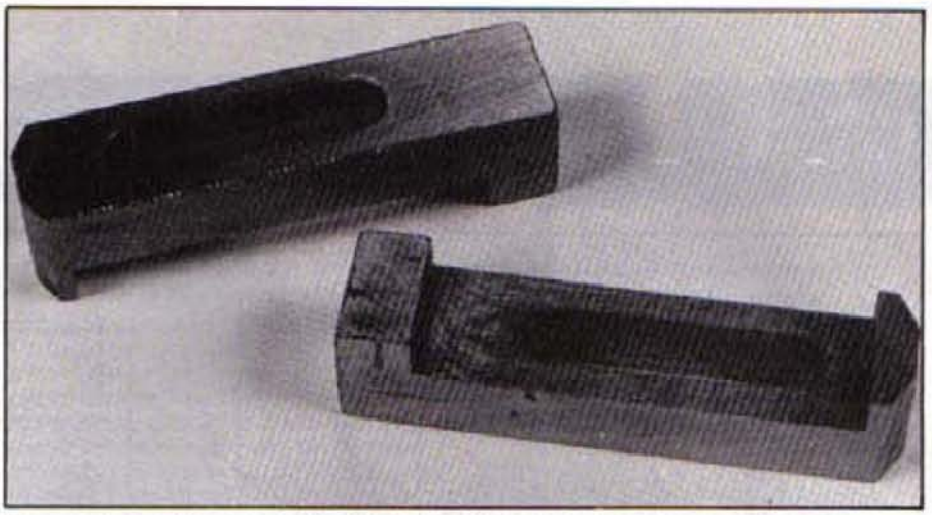

The arms are made from brass and are identical for both the fixed and travelling steadies.

The clamp

The clamp may appear more complex than need be, but this is to aid fitting the unit onto the lathe. To do this, loosen the fixing screws to allow the steady to be presented to the machine at 90 degrees to its operating position when the 1⅞ in. wide portion can be dropped between the bed shears. Unfortunately, this requires the fixing screws to be rotated a number of turns which can be tedious with a normal hex key. A longreach key (maybe home made) or even, as I find, a screwdriver which fits across two points of the hexagon helps to run the screw home before tightening with a normal Allen key.

One corner of the body top, and similarly the body bottom, requires radiusing as shown in **Figure 3** before final assembly. This is to allow the top to hinge when removing the front screw, thus permitting the components being machined to be removed without removing the steady and also without losing its setting, should it be necessary to return the part to the lathe or to machine a second identical part.

Improvements

Two changes to this design which may be worth considering are: (1) For the holes in the body top, **Figure 1**, to be tapped, thus avoiding the requirement for nuts to be fitted. This would be a particularly good approach if made from steel. (2) For the method of tightening the steady on to the lathe bed to be as shown in **Figure 2**, but this would require a large through-slot to be machined in the base which may present a problem in some cases.

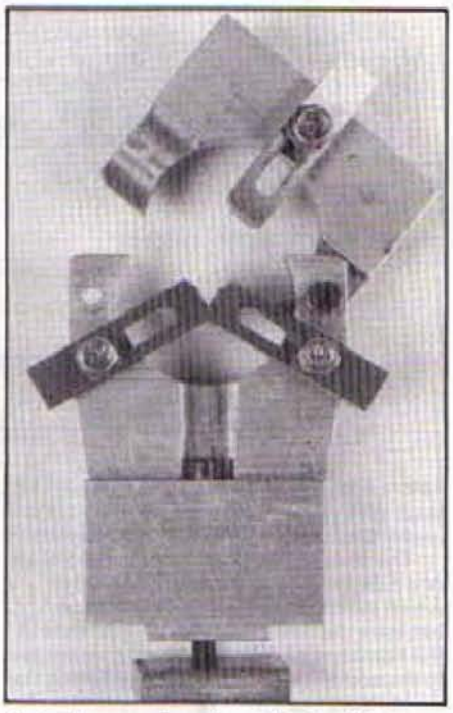

It can be seen here how the top hinges, allowing parts to be removed and replaced without losing the setting.

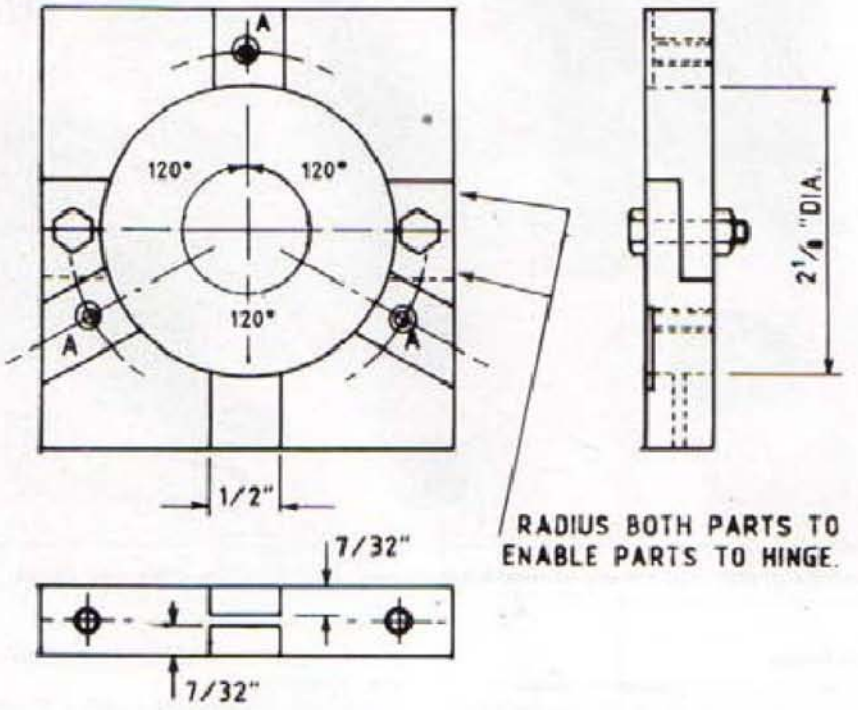

TOP & BOTTOM ASSEMBLED FIG. 3

FIXED STEADY ©

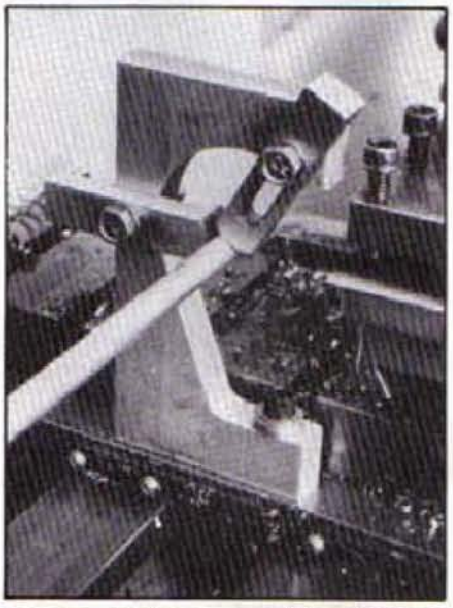

Above and right, the travelling steady in operation supporting a length of bar stock while turning.

FIXED STEADY

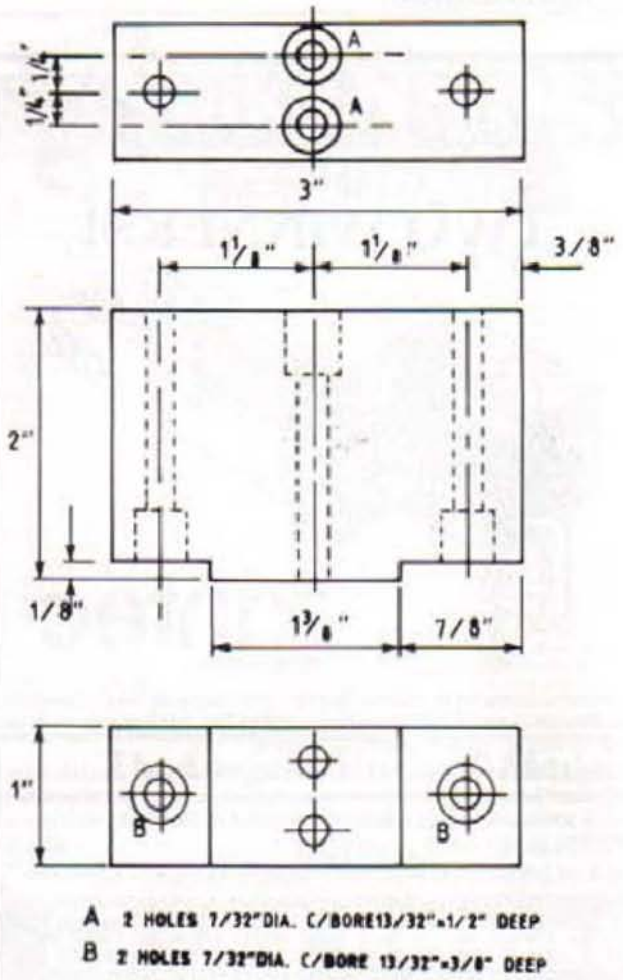

BASE FIG. 4

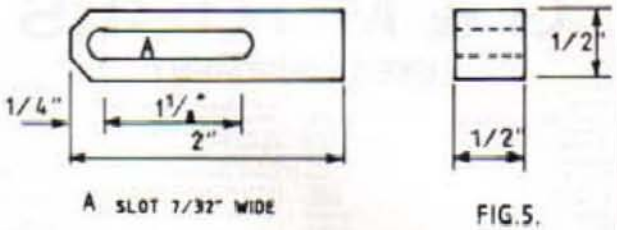

A SLOT 7/32" WIDE

ARM.

FIG.5.

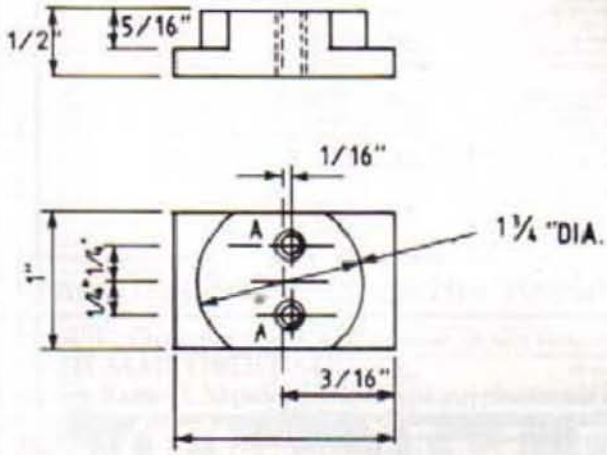

A 2 HOLES TAPPED M5.

CLAMP FIG. 6

Travelling steady

Making the travelling steady is a much simpler proposition; but before proceeding, it may be worth checking that the two dimensions marked with an asterisk are correct for the machine in which it is to be used.

Otherwise, the only other point to consider is the fixing screw; this is ¼ in. BSF on the old Super 7 lathe but it may be metric on later machines or machines of other manufacture and thus require a different size hole. If using a socket cap screw for fixing the steady, it may be worth modifying the ¾ in. dimension to suit the screw available.

Having made these steadies, they will considerably increase the capability of the lathe on which they are to be used and they're well worth the effort of making them.

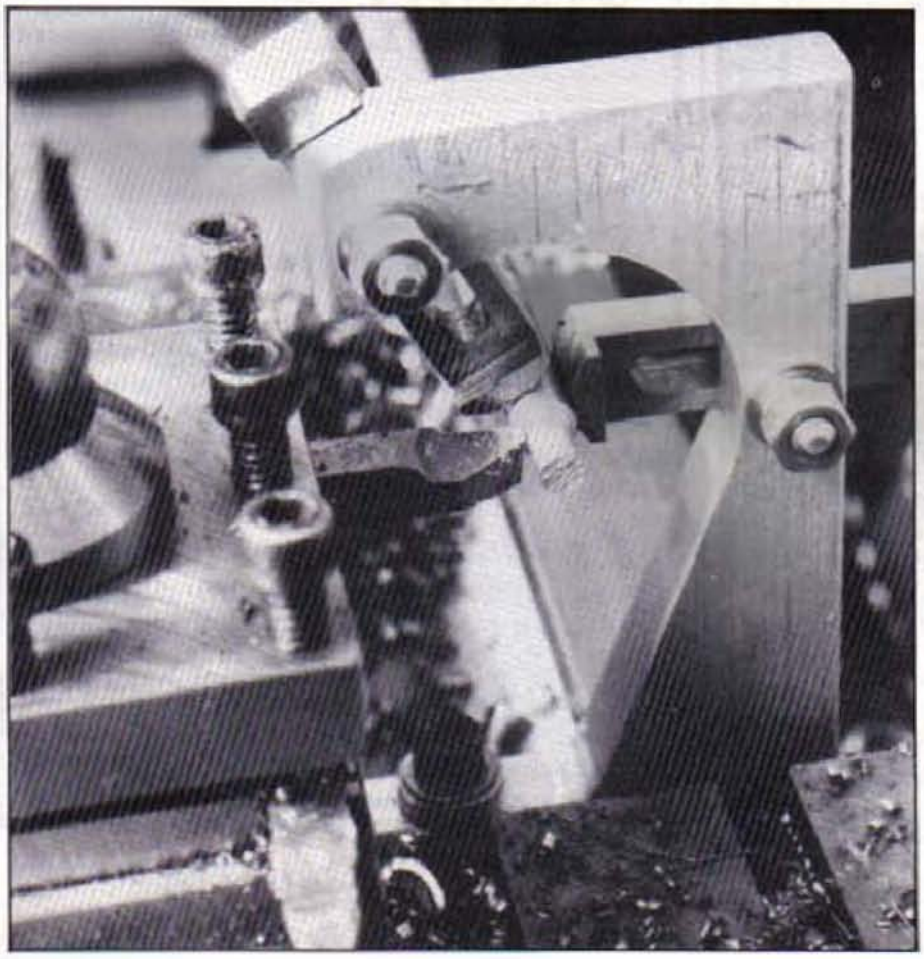

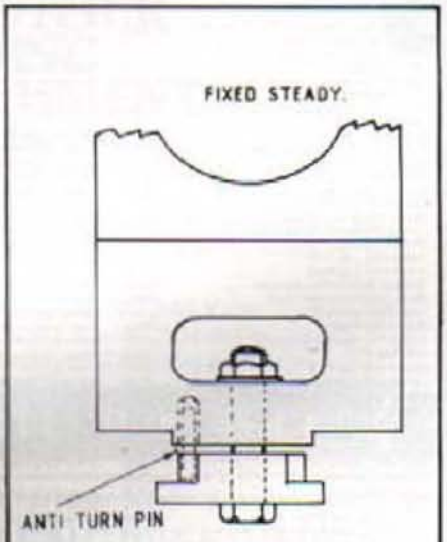

ALTERNATIVE FIXING METHOD FIG. 7

G & M TOOLS

USED EQUIPMENT

LATHES

[illegible]

DRILLING MACHINES

[illegible]

MILLING MACHINES

[illegible]

POWER HACKSAWS

[illegible]

GRINDERS

[illegible]

SHAPERS

[illegible]

BOXFORD SPARES & TOOLING

[illegible]

MYFORD SPARES AND TOOLING

[illegible]

HARRISON SPARES & TOOLING

[illegible]

MACHINE ACCESSORIES

[illegible]

WORKSHOP EQUIPMENT

[illegible]

MEASURING EQUIPMENT

[illegible]

CUTTERS, DRILLS, ETC

[illegible]

All items subject to availability.

Prices quoted are subject to VAT.

Our Own Delivery Service available to all areas mainland U.K. (including machines)

Open Monday-Saturday 9am-5pm

THE MILL · MILL LANE · ASHINGTON · WEST SUSSEX

TEL: (0903) 892510

Camden MINIATURE STEAM SERVICES

PRESENTS

TWO WINNERS!

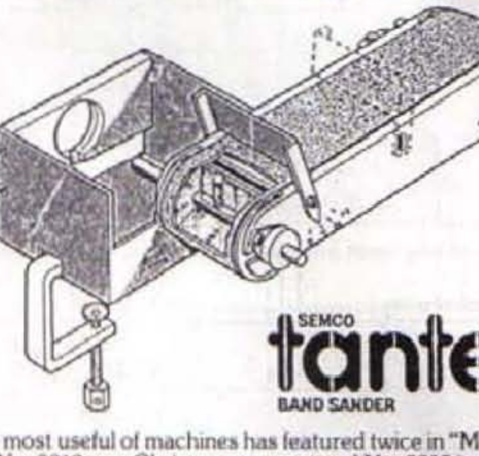

SEMCO **tantec** BAND SANDER

This most useful of machines has featured twice in "M.E." recently – in No. 3812 as a Christmas present and No. 3819 in an article on how to modify your Christmas present!

Designed to be powered by virtually any two speed electric hand drill, the "Tantec" can be used in the horizontal or vertical position with a trailing or facing fence. It is ideal for model engineering use.

PRICES: Basic Unit £25.10
Large Table (6½" x 5") £5.90
Spare Belts (in packs of 2) 40, 80, 120 or 180 grit available in single grit packs only £4.75

Prices shown INCLUDE Post & Packing within UK and VAT @17.5%

STRICTLY I.C.

Fourth year of publication

A 24-page bi-monthly periodical – no commercial advertising. **Basic & advanced how-to information on design & construction of single & multi-cylinder, two-stroke & four-stroke cycle engines of all types.** Featured every month is a construction article of such an engine. We began with simple single-cylinder, two-stroke and a basic "Antique Farm Gasoline Engine." All 1991 subscriptions start with February '91 - you will receive six issues.

Send £4.95 (£5.35 overseas surface mail) for a sample copy and subscription details.

ALL BACK ISSUES CURRENTLY AVAILABLE

Mail Order: (no stamp required in the U.K.) to:-

CAMDEN MINIATURE STEAM SERVICES
FREEPOST, 13 High Street, Rode, Bath, BA3 6UB
Tel: 0373 830151

(CALLERS WELCOME BY PRIOR APPOINTMENT)

The ATKINSON 'STANDARD'

A full complement of castings and materials is now available for this design. Principal dimensions: Length 60", Width 18", Height 26". Engine: 1¼" bore × 2½" stroke, twin cylinder double acting duplex engine with twin camshafts operating ball valves. Transmission by Simplex chain and sprockets to differential rear axle. Semi-eliptical springs all round.

Drawings, R.V.76. (12 sheets)		£40.44
Front chassis beam	Al.	£11.36
Chassis channel	M.S.	£25.20
Slipper guides & N.S. front spring carriers	G.M.	£9.86
Rear spring carriers	G.M.	£18.86
Offside spring carriers	G.M.	£4.76
Leaf spring material	C.S.	£43.68
Front hub caps	Br.	£7.30
Rear hub caps	Br.	£13.34
Axle jaws	C.I.	£8.32
Steering link lever	G.M.	£2.30
Front wheel bearings	G.M.	£8.34
Front axle tube	M.S.	£3.50
Differential housing	G.M.	£20.72
Diff housing drilling jig	C.I.	£3.66
Differential gear set	M.S.	£28.13
Differential cover	G.M.	£6.46
Brake drum	C.I.	£22.84
Chain sprocket, 40T	M.S.	£47.68
Chain sprocket, 80T	M.S.	£30.51
Roller chain and link	C.S.	£29.26
Rear axle material	M.S.	£11.38
Rear axle sleeve	M.S.	£3.24
Front wheels	Al.	£42.00
Rear wheels	Al.	£63.00
Rear axlebox top	G.M.	£21.08
Rear axlebox bottom	G.M.	£20.38
Steering column support	G.M.	£13.05
Steering wheels	N.S.	£7.36
Drop arm	G.M.	£3.36
Drag link ends	G.M.	£1.92
Reverse lever stand	G.M.	£4.34
Crankcase casting	Al.	£60.00
Bevel drive housing	Al.	£12.50
Bevel drive housing bearing	G.M.	£12.50
Nearside bearing housing	G.M.	£17.63
Nearside crank bearing	G.M.	£4.44
Offside bearing housing	Al.	£10.07
Offside crank bearing	G.M.	£4.44
Cylinder blocks	C.I.	£31.00
Front cylinder covers	C.I.	£3.76
Rear cylinder covers	C.I.	£6.45
Gland nuts	G.M.	£5.86
Crosshead liners	P.B.	£28.32
Crosshead	C.I.	£0.00
Piston head material	C.I.	£1.95
Big and little end bearing stick	G.M.	£13.71
Gland body covers	G.M.	£3.07
Offside engine mount	G.M.	£6.52
Camshaft bevel housings	G.M.	£21.75
Camshaft bevel housing covers	G.M.	£5.91
Valve housings	G.M.	£50.54
Drive shaft couplings	G.M.	£3.63
Drive bevel gears	M.S.	£27.05
Camshaft gear set	M.S.	£42.25
Piston rings 1½" × ⅛"	C.I.	£96.20
Camshaft lever frames	G.M.	£6.90
Cast firegrate	C.I.	£9.29
Firing chute	G.M.	£7.90
Boiler smokebox top	C.I.	£22.17
Boiler smokebox top ring	C.I.	£21.30
Chimney cap	Br.	£4.82
Chimney base ring	G.M.	£3.23
Blast pipe	G.M.	£4.34
Water heater top cover	G.M.	£7.30
Water heater base	G.M.	£5.76
Water heater elbow	G.M.	£2.72
Regulator housing block	G.M.	£5.65
Steam manifold	G.M.	£2.88
Water pump body	G.M.	£10.88
Water pump ram housing	G.M.	£3.06
Water pump ball housing	G.M.	£2.37
Water pump gland cover	G.M.	£1.88
Brake tube flange	G.M.	£2.42
Lubricator eccentric sheave	C.I.	£1.05
Exhaust valve body	G.M.	£3.23
By-pass valve body	G.M.	£2.37
Water valve body	G.M.	£1.82
Safety valve block	G.M.	£3.26
Tyres: Bonded, vulcanised and profile ground	Rub.	P.O.A.
Photo-etched maker's plate	Br.	P.O.A.

All castings and materials prices plus carriage plus VAT. Overseas clients exempt VAT. Advertisement current 11th April 1991.

The Largest Stock of Model Engineering Supplies in the World

22nd Edition illustrated catalogue price £2 post free U.K. Overseas Surface or Airmail, post extra.
COUNTER SALES or WORLDWIDE MAIL ORDER SERVICE.
Retail Counter Hours: Monday-Friday 8 am-4 pm Saturday 9 am-12.30 pm · 24 hour answerphone service.

A.J. Reeves & Co. (B'ham) Ltd

Holly Lane, Marston Green, Birmingham B37 7AW England. Tel: 021 779 6831 Fax: 021 779 5205

ASTRA MK VII

ALL GEARED HEAD
VERTICAL MILL/DRILL
- SUPPLIED TO PROFESSIONALS AND A SELECT BREED OF MODEL ENGINEERS.

TABLE 28¾" × 8¼"
X and Y 16" × 6¼"
QUILL STROKE 2¾"
WITH FINE FEED
3MT OR R8 SPINDLE

1hp
6 SPEEDS
80-1650
rpm

HEADSTOCK GEARS RUN IN OILBATH.
RACK AND PINION RISE AND FALL TO HEAD WHICH SWIVELS & ROTATES 360°
COST £1,800-£2,000?

NO £1,663!!

WEIGHT, A SOLID 270 kg!

SCOT URQUHART Limited

Tel: 081-874 5708/5709/9690
Fax: 081-871 2584
371 Earlsfield Road, Earlsfield,
London SW18 3DQ

HEMINGWAY HEADSTOCK DIVIDING ATTACHMENT

by George Thomas

Fixed in 1 min. for mandrel indexing on most Myfords. Unlimited divisions by micro attachment. Allows wheelcutting etc, while work is in lathe chuck. Kit includes most parts (pre-drilled plates available + drawings).

N.S. & A. Hemingway, 30 Links View,
Half Acre, Rochdale, Lancs OL11 4DD.
SAE for free catalogue (Overseas $2 note)

TEL: (0706) 45404

S J H ENGINEERING
MODEL ENGINEER

For all your turning, milling, drilling, full or part machined to your requirements, no problem. "T" slots, dovetails machined, loco parts, traction engine parts, workshop equipment all undertaken. No VAT.

Phone or write to:
51 Jessie Road, Aldridge, Walsall,
West Midlands WS9 8HW. (0922) 53620

Not all lathes have tee slotted cross slides, and yet without one there is a lack of versatility. Bill Morris from New Zealand describes how he set about making his own. Readers wishing to make such an item should note that suitable material is available from College Engineering Supply. They should also note that WE DO NOT APPROVE of the method used by the author for cutting the circular slots. Readers wishing to make the device are advised that they should fit a guard over the cutter on the milling machine

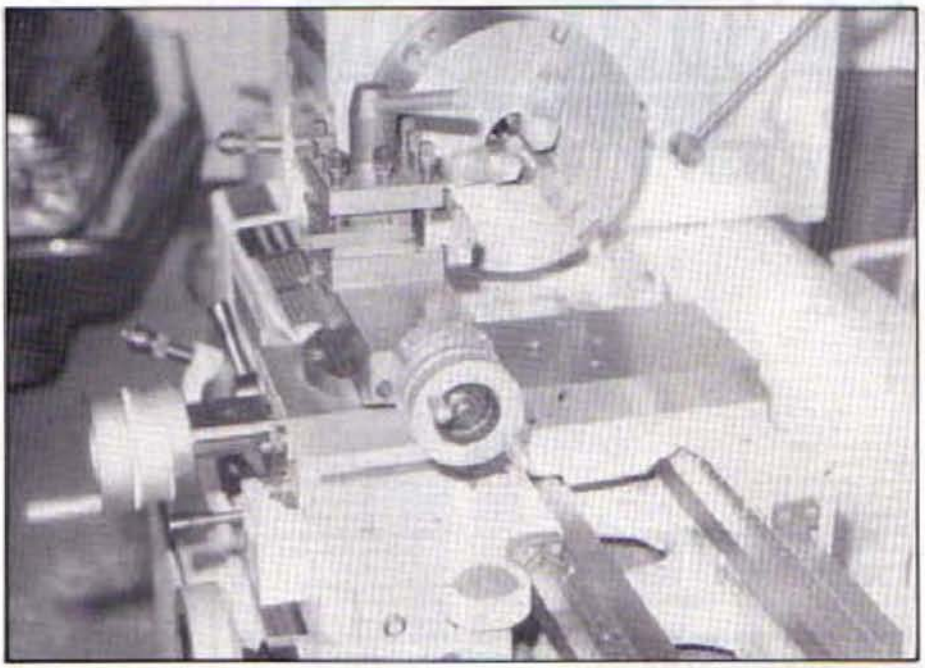

Fig. 1. Before...

A TEE SLOTTED CROSS SLIDE

I recently bought a brand-new lathe, made by the Wai Yii Corporation of Taiwan and marketed in the UK as the 1327 lathe by Warco. The UK model is sold with a slotted cross slide, but my New Zealand version has a plain one and, while there may well be enough metal (**figure 1**) to allow the slide to have slots put in it, I lacked the necessary courage to attack it. I decided instead to make a new one so that,

Fig. 2. Misusing a face cutter!

if I was not successful, I would simply have a lump of scrap iron; and if I was successful, I would have both an operational lathe and a slotted cross slide as well as experience at planning a major milling operation. The principles of construction could equally apply to other lathes without slotted cross slides.

My first task was to measure up the existing slide and make a pattern for the local foundry. Lacking all experience of this, I presented them with a varnished slab of wood with all the edges bevelled. If I had more experience, I might well have saved myself a lot of work later by having the slot for the dovetail slide cast in. In the event, I collected my slab of cast iron from a smiling (or was he smirking?) foundry manager a few days later and set to work. A mild steel slab could be used instead of a casting.

Milling the slots

I started by clamping one face of the slab with 'G' clamps to a large angle plate on the table of my mill-drill and rough machining one edge. The mill was supplied with an inserted-tooth facing cutter with carbide tips, and this made easy work of it, but the casting was of good quality with no hard spots and I dare say a high-speed steel fly-cutter would have done just as well. I then turned the slab around so the machined edge rested on a parallel and I did the other edge so that I then had two parallel edges and the whole thing could be clamped in the milling vice to rough machine the top and bottom faces. It was at this point that I began to wish I had given the foundry a different pattern, as I began to chew out a rough slot for the dovetail using the facing cutter, **Figure 2**. While it is not intended for this sort of abuse, it coped quite well as I sank the broad slot in easy stages, moving from one side of the slot to the other with each pass to avoid jamming. Several hours later, the slot was roughly to size and I decided to let stresses in the casting and in my jangling nerves settle down for a week or two!

Fig. 3. Cleaning up the underside.

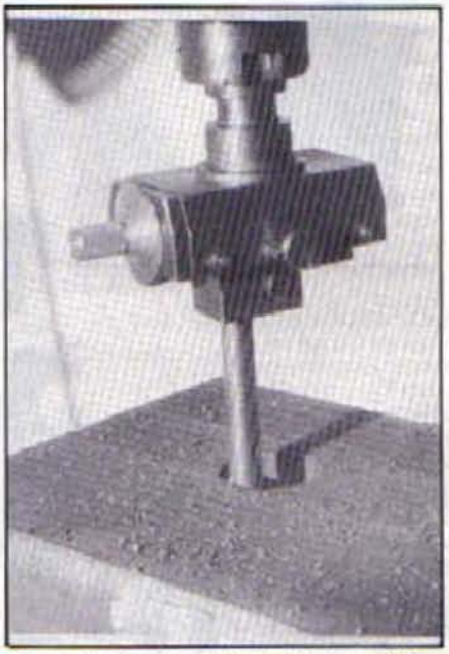

Fig. 4. Boring the hole for the top-slide spigot.

The circular tee slot

With the casting back in the vice, I cleaned up the slot, **Figure 3**, and took a quick skim off the underside so it would sit flat on the mill table for the next operation. The top slide on the Wai Yii lathe is located by a central spigot and clamped by two tee-nuts which run in a circular tee-slot. The slide measures 140 by 300 mm, so plainly I could not use my 100 mm diameter rotary table in producing this slot. Since the

Fig. 6. Misusing an end mill to cut a circular slot.

slot has to be concentric with the spigot, I decided to use the spigot holes as a central bearing to produce the tee-slot. After locating the centre of the spigot hole with a centre finder I drilled through and finished to size with a George Thomas boring head, **Figure 4**, so that the spigot was a nice snug fit.

I then drilled through a scrap of steel bar, faced the end and machinerd a spigot on it which was a tight running fit in the Hole and just about 0.02 mm longer than the slide is thick, **Figure 5**. The slide was then bolted to the table of the mill through this fixture so that it could rotate without lifting. Then, using a slot drill and *carefully* rotating the table *anticlockwise* on the axis, the slot could be cut to size in easy stages, **Figure 6**, without any tendency to snatch. Even so, I took no chances and wore heavy gloves. Keen-eyed readers will see that I used an end mill to produce the slot and this can be done in cast iron (I have not tried it on any other metal) if you rotate the work a little as you put on the cut. Once it has reached full depth, the width of the slot

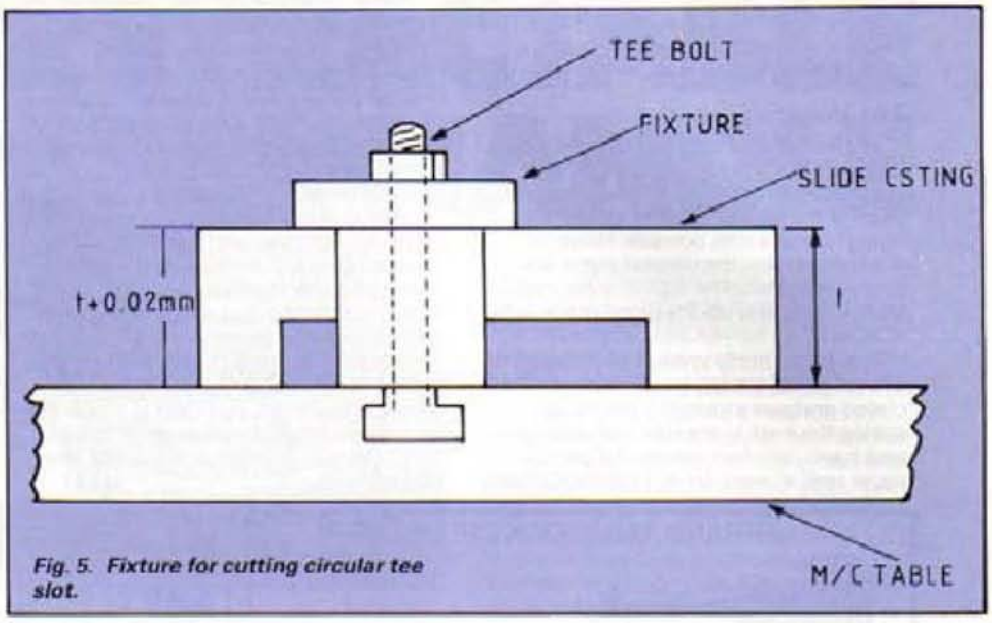

Fig. 5. Fixture for cutting circular tee slot.

is brought to size by moving the cross slide of the mill in or out as required. I undercut the slot with a home-made tee-slot cutter whose diameter, of course, cannot exceed that of the mouth of the slot. Obviously, to avoid snatching, a serious event when fingers are at stake, the work must be rotated anticlockwise to undercut the outside and clockwise to undercut the inside of the slot. Once the slot was finished, I drilled a hole through the bottom and enlarged it from the other side later to allow the tee-nuts to be put in place.

With this nerve-racking operation finished, the slide went back into the vice to produce the transverse tee-slots. These can, of course, be placed wherever is convenient and I spaced mine to make it easy to attach my George Thomas Versatile Dividing Head using the same size tee-nuts as fit my milling machine. Producing these slots is relative child's play provided one takes easy cuts without being impatient. The slot is cut to full depth with a slot drill first and then followed through with a tee-slot cutter. The only slightly critical time was when the tee-slot cutter was just about to break through at the end of the slot, **Figure 7**. It is as well at this point to tighten up the table slide of the mill and to go slowly to avoid snatching. Cutting the tee-slots might well have relieved more

Left, Fig. 9. Cleaning up the end. Below, Fig. 8. Setting over with aid of gib strip.

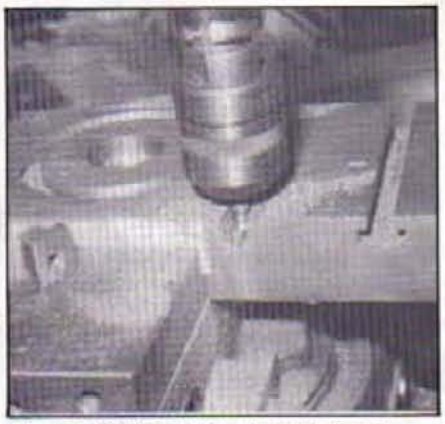

Fig. 7. Tee slot cutter about to break through.

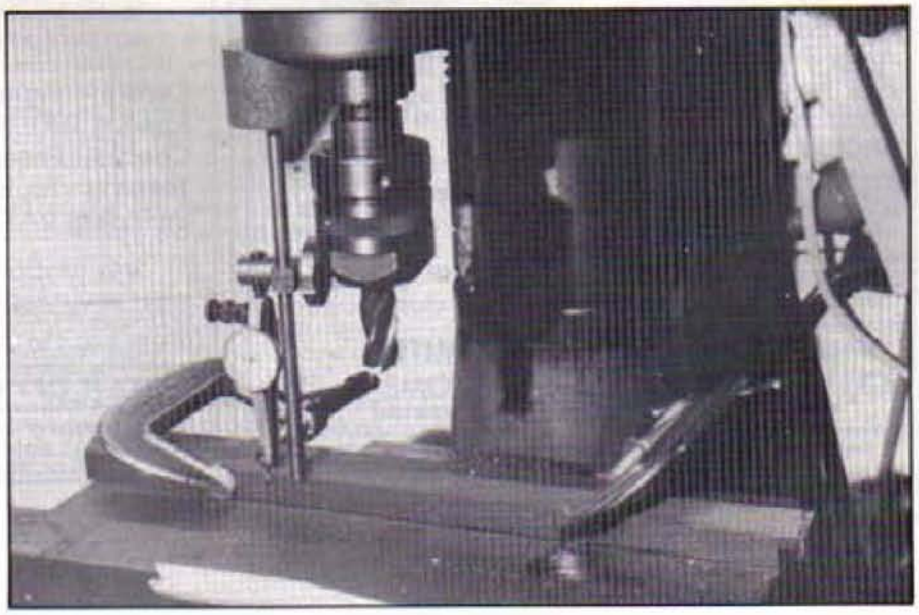

stresses in the casting, so I rested it and me for another week or two before taking a skim over top and bottom.

The dovetail

So far, with the possible exception of producing the spigot hole, none of the operations were critical. It is no great disaster if a tee slot is not in exactly the right place or a little oversize. However, finish-machining the dovetail slot was a critical operation. The Wai Yii lathe uses taper gibs, and while these are much easier to adjust than parallel gibs, angles are critical if they are to work at all, though one can get out of trouble by using a judiciously placed grubscrew or two. I started by setting the work in the vice and tapping it well down onto four pieces of cigarette paper until all were firmly held (incidentally, cigarette paper is much thicker, at about 0.0008 in., than commonly quoted). I then clamped the gib to the face of the slot and rotated the vice until a dial test indicator run along the face of the gib gave a constant reading, **Figure 8**. It was then a simple matter to run an end mill along the edge of the slot and carefully undercut with a dovetail cutter. Resetting the work parallel to the table movement, repeating the exercise on the thrust face of the dovetail slot until it was to size and taking a fine finishing cut over the bottom of the slide completed the dovetail slot and it was time for a trial fitting. I didn't get the angle quite right, I think because my dial test indicator was less than rigid, and I had to resort to a grub screw to adjust the angle of the gib strip. This is just visible in the photo of the finished slide.

The stepped hole

The next operation was to locate, drill and bore the stepped hole for the steel bush which holds the feed nut in place. To clean up the ends and to drill and counterbore holes for the gib adjustment screws, some thought was necessary to fit the work into the capacity of the mill. **Figure 9** shows my solution. Then it was time to clamp the slide back onto the mill table and take a finishing cut over the top. **Figure 10** shows the finished results. I intend to leave the original slide in place unless I need a slotted cross slide for a particular job. Although I have learned a lot from making the slide and hope readers will gain from my experience, I am under no illusions about my work being up to the same standard as the beautifully machined original....

ARRAND TAILSTOCK DIE HOLDER

★ Unique two piece head allows dies to be centralised to component.
★ Holds 7/16", 1", 1 7/16", 1 1/8" dies.
★ Cuts threads up to 1/2" dia. and 3" long.
★ Hardened and ground shanks.
Price including P&P and VAT
1MT Set £47.18, 2MT Set £47.18
3MT Set £50.11

ARRAND ENGINEERING
The Forge, Knossington, Nr. Oakham, Leicestershire LE15 8LN.
Tel: Somerby 566 (STD Code 066-477)
UK enquiries please send 9" x 4" SAE for full technical leaflets.
★ *ANOTHER QUALITY PRODUCT FROM ARRAND* ★

Fig. 10. After...

PROOPS BROTHERS LIMITED

V-BLOCK AND CLAMP SET

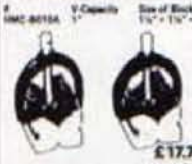

£17.75 + c+p £2.45

MICROTORCH ONLY £7.70 + c+p 80p

- Pencil-thin Microtorch
- Refills with Lighter Butane
- Reaches 1330°C
- Infinitely Variable Flame
- "CE" Approved

Lightweight but robust, the Microtorch is ideal for those small jobs and emergency repairs. Just pop it in your tool box and you are prepared to carry out a bit of Silver Soldering, even when miles from your workshop. The extended brass burner allows you to provide local heat to even the most inaccessible areas whilst the pen-style construction makes it easy to hold. The Microtorch is filled by normal butane fuel and will give approximately 20 minutes working time on a single fill. Each Microtorch comes with a full set of instructions. So don't delay, complete your toolbox today.

MAGNETIC BASES

£16.15 + c+p £3.25

MICROTORCH ACCESSORIES

10502 10515 10525 10520

10502 - Catalytic Tip **£6.35** + 50p + P&P
10515 - Set of Tips for use with 10502 **£3.00** + 50p P&P
10520 - Hot Air Tip **£6.05** + 50p P&P
10525 - Wide Flame Tip **£3.35** + 50p P&P

ARCHIMEDEAN DRILL

Spiral type hand drill. Swiss Made, steel chuck (0-1.0mm). The drill turns by pushing the centre piece up and down. Superbly made precision tool with applications in many fields.

£5.60 + c+p 50p

DOUBLE END PIN VISE

£2.10 + c+p 50p

SWISS STYLE HAMMERS

£1.70 + c+p 75p

PROOPS BROTHERS LIMITED
TRADE ENQUIRIES WELCOME

RETAIL & MAIL ORDER
21 Masons Avenue · Harrow · Middlesex HA3 3AH
Tel. 081-861 5258. Fax: 081-861 5404
Open Tuesday to Saturday
9.30am to 5.30pm. Closed Mondays

RETAIL ONLY
Technology House · 34 Soddington Road
Fleckney · Leicester LE8 0AW
Open Friday & Saturday ONLY
10am to 4pm

NOW AVAILABLE EX STOCK
THE INTER CITY CT 918 BENCH LATHE

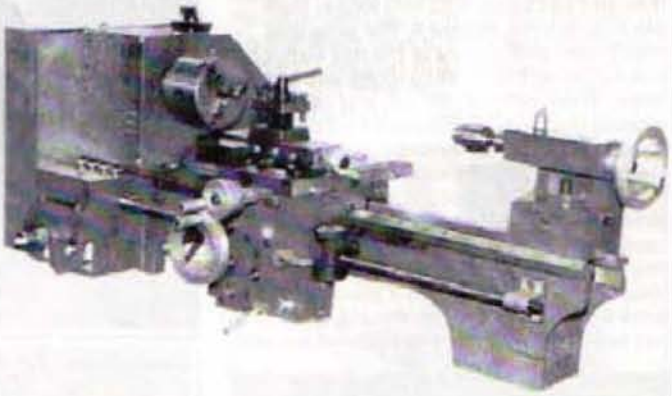

Centre height 4½" × 18" Between Centres, Speeds 100-1500rpm. Q.C. Gear Box 3 & 4 Jaw Chucks, Faceplate, 4 Way Toolpost, Set of Turning Tools, Single Phase Motor £1200 including VAT and Carriage.

MAIL ORDER A PLEASURE - C.O.D. SERVICE AVAILABLE.
SEND FOR OUR PACKED CATALOGUE OR COME AND BROWSE IN OUR EXTENSIVE SHOWROOMS TO SEE THE MANY MORE ITEMS AVAILABLE.
OPEN: 9.00-5.30 MON.-FRI. AND 9.00-12.00 SAT.

INTER CITY *MACHINE TOOLS* (HIGH WYCOMBE) *LTD*
HIGH WYCOMBE (0494) 33211-2-3
FAX: (0494) 31602
TELEX: 838861 INCITYG
LINDSAY AVENUE
HIGH WYCOMBE
BUCKS HP12 3ER

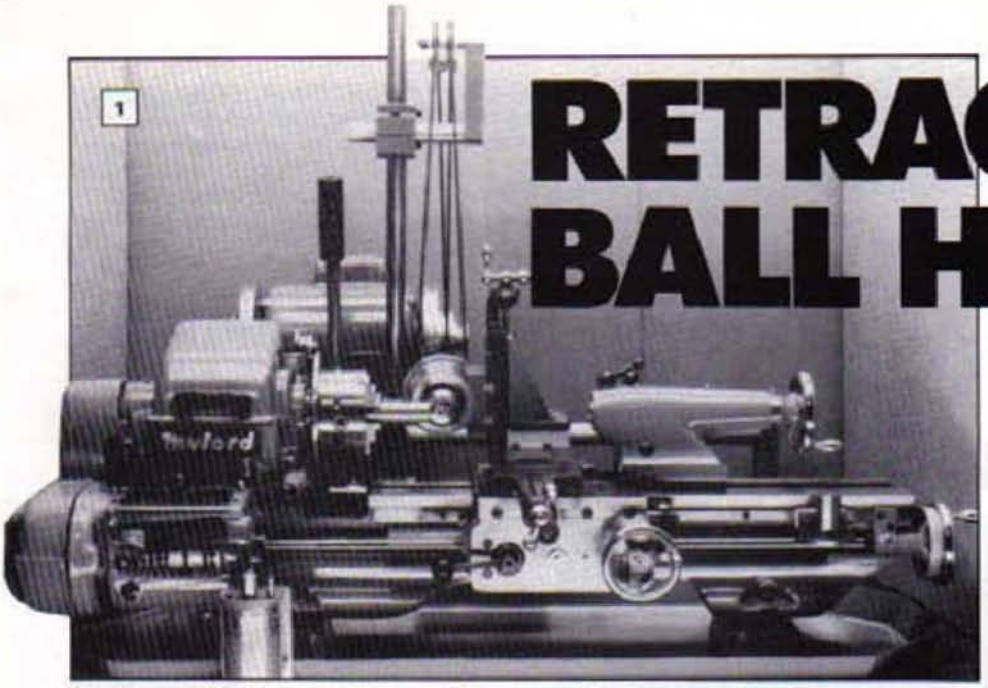

RETRACTABLE BALL HANDLE

Photo 1. The author's Myford Super-7 lathe with universal motorising unit.

Ted McDuffie is well known to readers for his excellent articles that have appeared in the magazine. In this one he describes his milling attachment for his Myford Super-7 Lathe and goes on to describe at length the construction of a retractable cross slide handle which can be adapted to any lathe

My introduction to tools was at the age of five when my father constructed a toolbox for me and gave me my first set of tools. My collection has grown and my fascination with tools and how they can increase one's ability to create has not lessened over the years. Although my profession has been in the field of electronics, my tools have been a constant source of pleasure.

My machine shop is located in a separate building in my garden and is equipped with the usual milling machines, lathes, drill presses and power saws. As I have always enjoyed clocks and clockmaking tools, I also have a small clock shop in a spare room in my home.

In recent years I have found it more confortable to work in the heated or air-conditioned comfort of my clock shop rather than in my outside shop. To save frequent trips to my outside workshop I decided to install a larger lathe in my clock shop. After looking at many lathes I decided that it would be necessary to modify a lathe to make it suitable for my needs. Much of my work requires turning, milling and dividing, and I wanted to be able to do all these things on this lathe.

Myford Super-7 lathe

After a great deal of research I concluded that the Myford Super-7, with some modifications, was the best lathe available for my needs in clockmaking, toolmaking, and tool restoration. In clockmaking it is often necessary to make new wheels. It is helpful to be able to turn the blank to size and then cut the teeth without moving the blank. With the Myford cross slide, it is practical to have turning tools and milling tools mounted at the same time.

Division

Most of my work requires dividing capabilities and I prefer dividing on the nose of the headstock. This was accomplished by attaching a latching arm to the headstock and providing dividing plates for the nose of the headstock spindle for use with collets, as described in the last issue. All of my chucks and faceplates also have dividing holes, or attached plates, on the back side, so that I can divide any work set up on the headstock.

Power for attachments

My next requirement was to have power available for the cross slide attachments. I have enjoyed the feel of round leather belts with direct drive on smaller lathes, so I decided to use one motor, on a slide, with leather belt drive, to power the milling accessories as well as the headstock. The motor can be easily moved to any position across the width of the lathe and has a pulley on each end. These pulleys will accept round belting of diameters from $\frac{1}{4}$ to $\frac{3}{8}$ in. The two pulleys make it possible to power the headstock and an accessory on the cross slide at the same time. This has worked extremely well and gives me a closeness to my work that is impossible with a vee belt drive and the usual countershaft.

By using a six-pole motor with a three-step pulley and a direct drive, the range of turning speeds is expanded to twelve speeds plus the back gear speeds. The lower speeds are similar to the Myford standard speeds and the upper range is extended to 2700 rpm. The traction of the $\frac{3}{8}$ in. round leather belt on the headstock is adequate for the heaviest parting cut and will still slip if the headstock is suddenly locked. Any of the 12 regular speeds, or the back gear speeds, are available in a matter of seconds. See **Photo 1**. All of my modifications and accessories have given top priority to ease of mounting of the devices. Much of this was accomplished through the use of 'T' bars and keyed bases on devices to make it a simple matter to properly position the devices to a predetermined position.

Another modification was to make a $\frac{3}{8}$ in. thick adapter plate to go between the vertical slide and the cross slide. In using the slide for milling, the mounting bolts are so far from the point of effort that unnecessary strain is placed on the 'T' slots in the cross slide. I drilled a hole for a $\frac{3}{8}$ in. bolt in the base of the slide as near the face of the slide as practical, so that a third bolt secures the slide to the adapter plate. The adapter plate is secured with two countersunk bolts and the original two bolts that have been lengthened to pass through the adapter plate. These four bolts are threaded into two 'T' bars in the cross slide to distribute the effort to the entire length of the slot. The milling head can be mounted on the vertical slide and the vertical slide mounted on the cross slide in less than two minutes, including the time for setting up the belting.

The milling head

The milling head I have used can be made on the Myford Super-7. I turned the spindle for the milling head on the Super-7 but it has the dimensions of the spindle in the Myford 1495 dividing attachment. The nosepiece is interchangeable with the regular nosepiece but was made smaller and longer to permit better visibility when using the milling head in the vertical position. Nine spindle speeds are available with a range of 400 to 4500 rpm.

Having a large fully equipped workshop and a small shop, with a lathe as the only large tool, has placed me in the unique position of being able to compare the ease of doing a particular job in both workshops. In past years I was convinced that it was necessary to have a tool for specific operations and I always avoided multipurpose tools. Recently, I have changed my way of thinking and find that in many instances it is easier to change the function of the tool rather than set-up the work on another tool. I also find that I am doing more and more of my tool restoration work and toolmaking on my Myford rather than in my complete machine shop. The fact that many of the operations can be completed without removing the work from its position saves set-up time. This also eliminates positioning errors when moving the work from tool to tool.

The Super-7 top slide

The first design problem I encountered with the Super-7 was the fact that I couldn't make low-angle cuts with the top slide. In making relieved fly-cutters for clock wheel cutting, it is necessary to make cuts in the 0 to 5 degree range and this was prevented because the top slide handle was restricted by the cross slide assembly. In using the top slide, I found that I seldom used the crank on the handle. The handle crank could have been retained but for my purpose I felt that it was unnecessary. It was a simple matter to design a handle that

would clear the lower slide. My final design for the top slide handle is easy to use at any angle and the knurled section makes it easier to provide continuous movement of the cutting tool than with the original handle. See **Photo 25**. The ball arms are used in the closed position when over the cross slide and in the open position at larger angle settings of the top slide.

Making the ball handle

To demonstrate the versatility of a lathe with milling and dividing capabilities, I will present a step-by-step procedure of making this top slide handle on the Myford Super-7. I am certain that most *Model Engineers' Workshop* readers could duplicate this handle from the one photograph, so please bear with me when I go into what might seem to be an excessive amount of detail. My purpose is to encourage readers who have a limited space or a limited budget to make their lathe more versatile rather than wishing they had additional machinery. All the accessories, the special tools and the direct drive unit used in this article can be made on the Super-7, or a comparable lathe. My feeling is that the lathe is the most important tool in your shop and if it is almost the only tool, you can afford a much better lathe.

In making this handle, the milling head must be set up in two positions so I have made all cuts for each position at the same time. In this way it is only necessary to change the milling head one time during the entire job. The top slide can be left in place during the whole procedure but I have removed it at times in order to photograph the different operations.

Safety

There is always a certain amount of danger when working with machinery. The design of some tools requires that you remove your hands from the work to operate the power switch and this is an excellent safety measure. Overhead belt drives are a special danger and the smallest belt possible should be used. If you find it necessary to have your hands near belt pulleys, belt guards should be installed. All the milling in this article was done with a $\frac{3}{8}$ in. dia. plastic belt. Long hair, which ceased to be a problem for me many years ago, is very dangerous when working around open belts. Always wear protective devices for your eyes, as cutting tools are brittle and can splinter when broken. Last but very important, fingers were not meant to be used for clearing away chips and cuttings, brushes are available for this purpose. Brushes with brass bristles, steel bristles and plastic bristles should be near at hand and, most important, used! Always have proper respect for your tools!

Photo 2. Spring parting tool with concave ground blade. Photo 3. Drilling the centre hole. Photo 4. Setting the top slide for boring the taper; dial indicator is set up on the lathe bed.

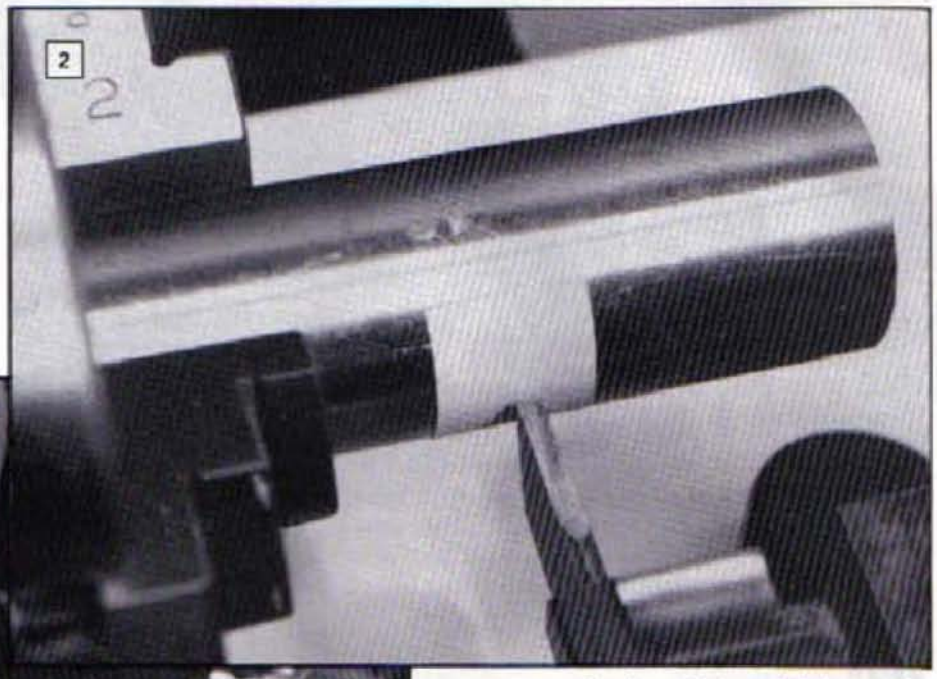

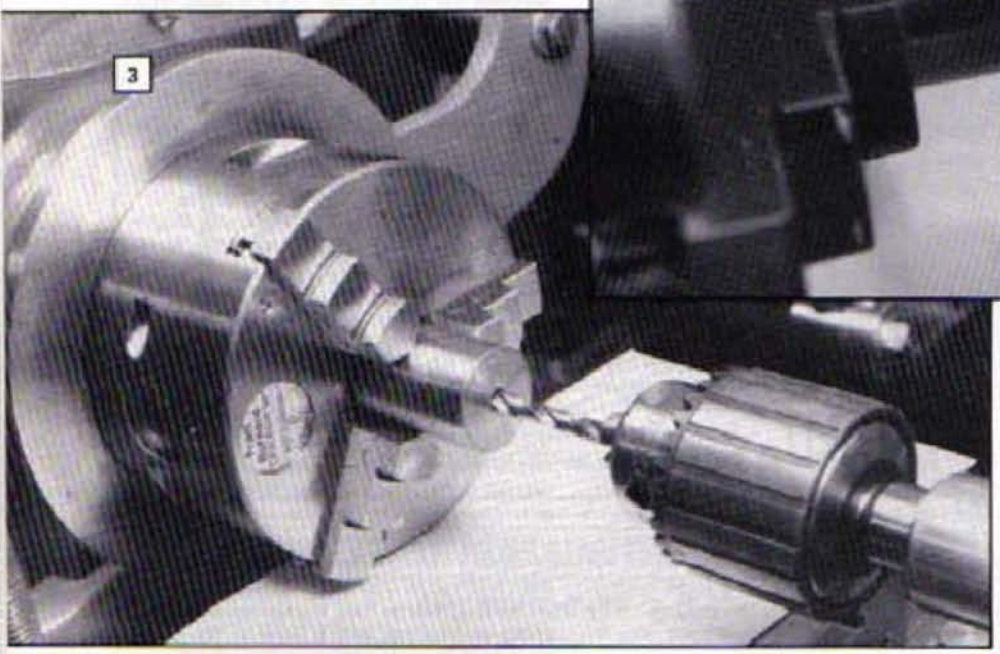

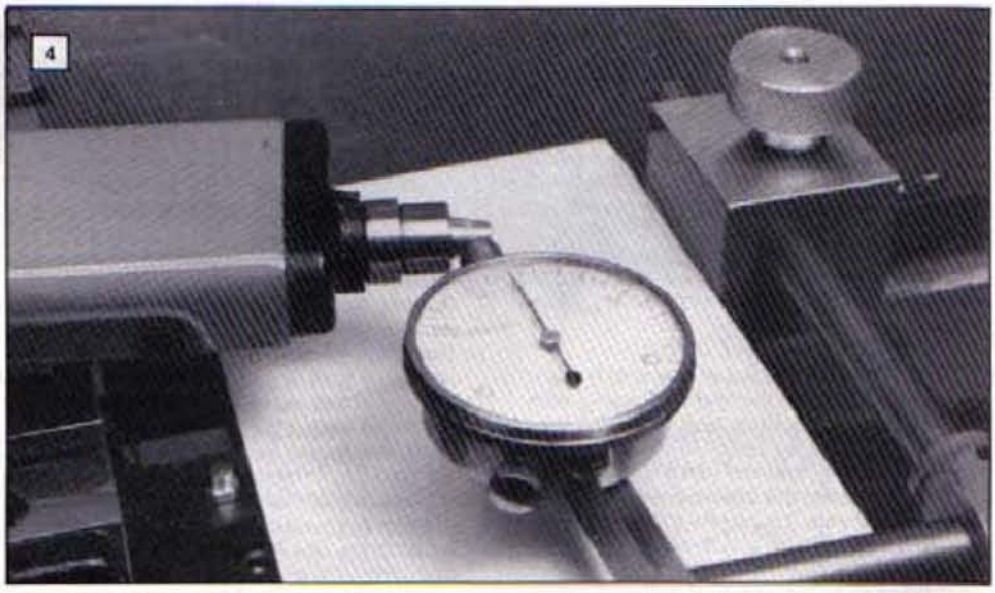

Getting started

Now to begin the handle; part a piece of 1 in. stock for the handle body. See **Photo 2**. I prefer a free-cutting stainless steel, as the finish is durable and matches the other handles on the Myford. The length of the finished body is $1\frac{1}{4}$ in. but cut the stock at least $\frac{1}{4}$ in. longer. The taper must be a perfect fit on the top slide feed screw, and if it takes a couple of tries to get this fit, there will be adequate stock. Note the shape of the cutting tip of the spring parting tool blade in **Photo 2**. The cutting edge is ground to a concave shape on the edge of a grinding wheel or a handheld grinder. This shape tends to form the cuttings into balls that clear the slot and increases the efficiency of the parting tool.

The centre hole may be drilled with a drill in the tailstock. Start the hole with a combination drill and countersink, or centre drill, and finish with a $\frac{3}{8}$ in. drill. See **Photo 3**. I prefer to drill this hole $\frac{1}{4}$ in. and bore it to finished size with a half round boring tool. These boring tools are similar to a half round drill except that the end is ground to cut on the leading side only.

With equipment found in most small shops, it is difficult to measure the angle of the taper on the end of the top slide feed screw. Also the angle scale on the top slide is not a precision scale. In order to make this cut in the new handle, it is necessary to set the top slide to this angle. A simple way to accomplish this is to remove the handle and set up a dial indicator on the lathe bed with the indicator tip on dead centre of the taper. See **Photo 4**. Change the angle of the top slide until it can be moved from side to side, with the carriage handwheel, without changing the reading on the dial indicator. At this setting, about 11 deg. off lathe centre on my scale, the top slide is set to the exact angle of the taper.

A modified half round tool is excellent for small boring operations such as the tapered hole. See **Photo 5**. The one shown is made from $\frac{3}{8}$ in. drill rod. Be certain that the stock is cut exactly to the centre when making the tool and be sure the lower edge of the cutter does not drag when cutting. The cutting nose of the tool is rounded to provide a smooth finish cut. Position the cutter at the exact lathe vertical centre, lock the carriage saddle and proceed with the cut using the top slide. Continue with the cut until the outer end of the hole is slightly larger than the matching hole in the original ball handle. Then take smoothing cuts off the end until the hole matches the original. See **Photo 6**. These smoothing cuts will make the end of the handle true with the taper. This sizing is very important because this is the fit that permits the micrometer dial on the top slide to have the proper friction fit.

Before proceeding, it is necessary to determine if the taper is a proper fit. There are three choices: remove the compound, remove the chuck or remove the work from the chuck. I prefer to remove the work from the chuck, because if it is not a proper fit it is advisable to cut new surfaces. First try the fit to see how it feels. If it feels like a proper fit, remove it and make longitudinal lines on the tapered shaft with a pencil and try it again. Turn it a few turns and if the lines are equally removed, the fit is satisfactory; if not, it is necessary to try again. It is best to go back to the start and reset the angle with the dial indicator.

When the fit is satisfactory, mount the body of the new handle on the top slide and determine if the operation of the micrometer dial is satisfactory. When you are satisfied with the fit, this end of the handle is complete. A person with large hands might find the handle more comfortable with a longer knurled section, so if this is the case, this full length may be used. This decision can be made while the handle is in place. If desired, return the body to the chuck and turn to $1\frac{1}{4}$ in. length by taking cuts off the unfinished end.

Cutting the ball handle arms

There are various ways to turn a ball in a lathe. The exact diameter of these balls is not important but I have used a 0.475 in. dia. as they are turned from $\frac{1}{2}$ in. stock. Without a ball turning attachment, probably the easiest method is with a formed tool. A formed tool may be made from a piece of annealed steel about $\frac{3}{8}$ in. thick. A discarded file that has been annealed by heating to the critical temperature and slowly cooled is satisfactory. Drill a $\frac{3}{8}$ in. hole near the end of the blank. With a tapered reamer, ream the hole until the small end of the hole is the diameter of the ball you are going to turn. I prefer 15 degrees of clearance for free-cutting steel, or less with tougher steel. If your reamer will not produce this clearance, slight angle changes are possible by reaming at a slight angle. Saw away the section to leave a tool as in **Photo 7** and grind the end for a 15 degree clearance. The angle on the end of the formed tool is important but not critical. The section of the cutter that cuts the outer end of the ball must pass the centre of the ball before the cut is complete. I have used a 65 deg. angle on the tip of the formed tool. The top clamp was removed for the photograph so that the complete cutter could be shown. Harden the formed tool by heating to the critical temperature, quench in oil and temper to a pale straw. Touch up the cutting edge with a fine stone and the tool is ready for mounting on the slide as shown in **Photo 7**.

An alternative and easier method of making this cutter is to grind the serrations off a section of a full hard file on a grinding wheel to leave a bright surface. A file is very brittle, so it is best to temper it to a pale straw. Extreme care must be exercised in heating, as it takes time for the heat from the underside to penetrate $\frac{3}{8}$ in. steel. Apply the heat slowly, at least an inch from the end, and have a pail of water handy. If the colour appears and begins to darken too quickly, quench immediately. If heated to a blue colour, the metal will be too soft for a cutting tool and will have to be hardened. Grind the cutting end for proper relief, about 15 deg., and remove a notch with the corner of the grinding wheel in the position of the semicircle. With a handheld high-speed grinder or a drill press, with a $\frac{1}{4}$ in. cylindrical stone, grind the semicircle to size with proper relief. Use care not to overheat the cutter when grinding. Check the cutting edge and touch up with a fine stone where necessary. The formed cutter in **Photo 7** was made in this manner.

The shape of a cutting tool is extremely important. A cutting edge with an included angle of 60 deg. is probably the most efficient. As many metals require more strength, it is necessary to increase this

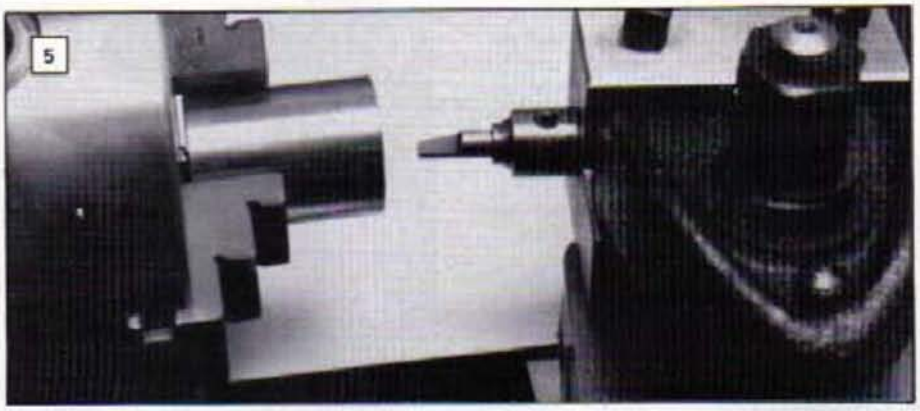

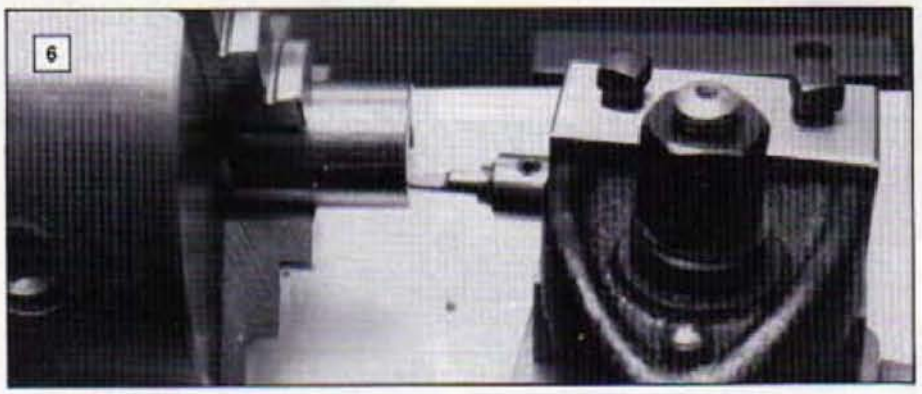

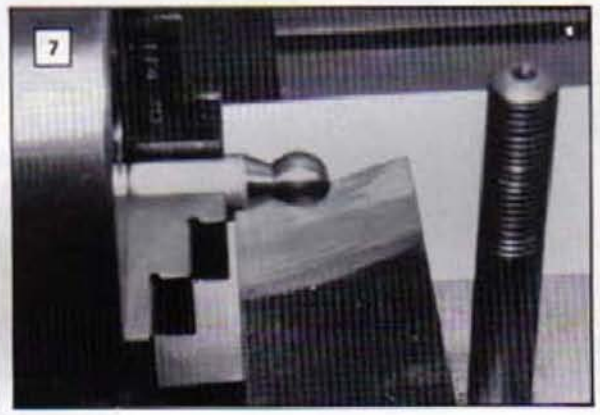

Photo 5. The cutting tool for boring the taper – in this case a modified half-round tool is excellent. Photo 6. The tool in action taking a smoothing cut. Photo 7. Turning ball with formed tool (top clamp removed).

angle. My experience indicates that in using cutting tools such as formed tools with no top rake, it is better to increase the relief to present a smaller included angle of the cutting edge. When taking wide cuts off drill rod stock, I often use a cutting tool with 15 deg. of rake and 15 deg. of clearance. This is a great deal more than the recommended rake and clearance but I find that it works very well on a small lathe.

To turn the balls, mount a piece of $\frac{1}{2}$ in. stock in the chuck with 1 in. of the stock extending from the chuck. Position the cutter as shown in **Photo 7** and lock the carriage saddle. Make the cut with the cross slide at a turning speed of about 75 rpm and use adequate cutting oil. At this rpm a rather heavy cut may be taken without chattering. As the cut nears completion, reduce the feed for a light finish cut. The balls in **Photo 7** to **12** are photographed as finished with the formed cutter and were not polished.

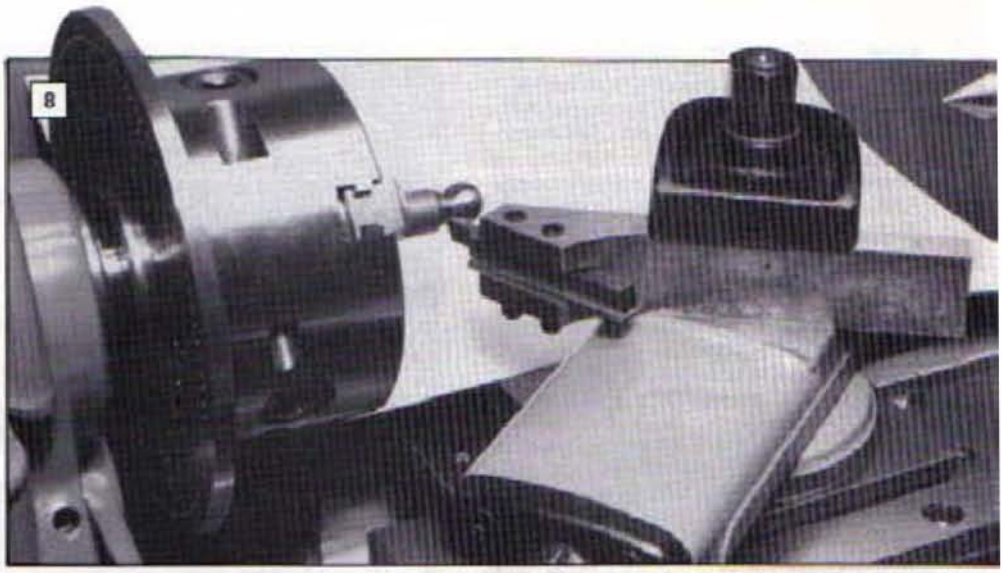

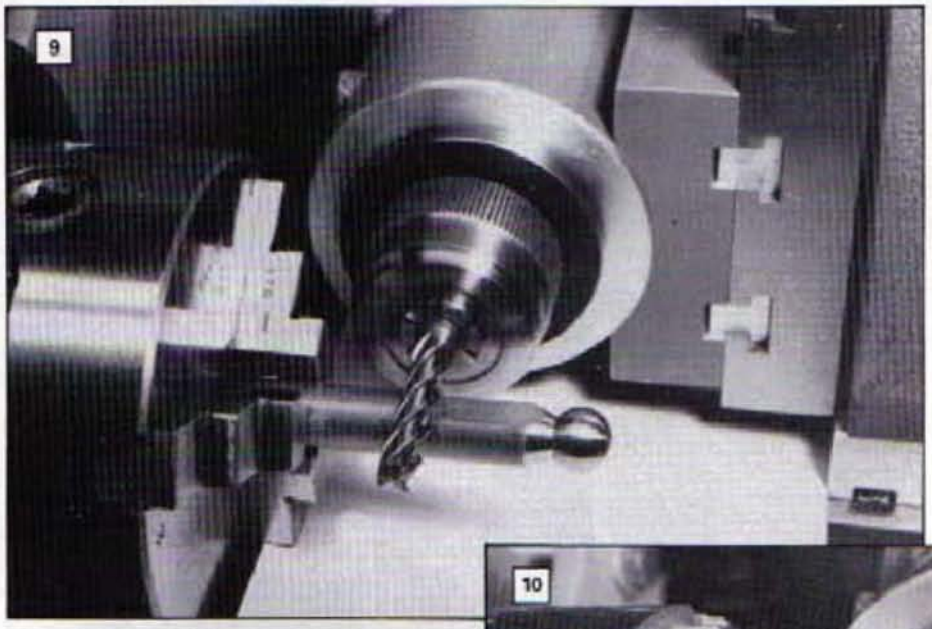

When the balls have been turned, the taper may be changed to suit the length of the ball arms. I have used a 20 deg. off lathe centre top slide setting, for the overall arm length of $1\frac{3}{16}$ in. See **Photo 8**. This toolholder is an excellent solution to the problem of reaching across the gap bed with a cutting tool on the Super-7 when cutting close to the spindle nose using a collet. It is reversible and has set screws on both sides.

Position the ball handle arm blank to expose two inches of stock. See **Photo 9**. Mount a $\frac{3}{8}$ in. end mill in the milling head and take a light cut off the top of the blank with the chuck locked in position. Rotate the work 180 deg. and make a similar cut on the other side. Measure the blank and continue taking cuts off alternate sides until the $\frac{5}{8}$ in. thickness is reached. Rotate the arm 90 deg. and mill the third side. See **Photo 10**. Leave a small section of the original diameter between the three flattened sides, which will make it possible to hold the arm in a chuck on centre for polishing and correcting small differences in the two arms.

Replace the milling cutter with a centre and position the milling head to lathe vertical centre with a combination square. See **Photo 13**. The hole centre should be in the centre of the flattened space, 1 inch from the ball end of the arm. Start the hole for the pin with a centre drill and drill with a $\frac{1}{8}$ in. drill. See **Photo 11**.

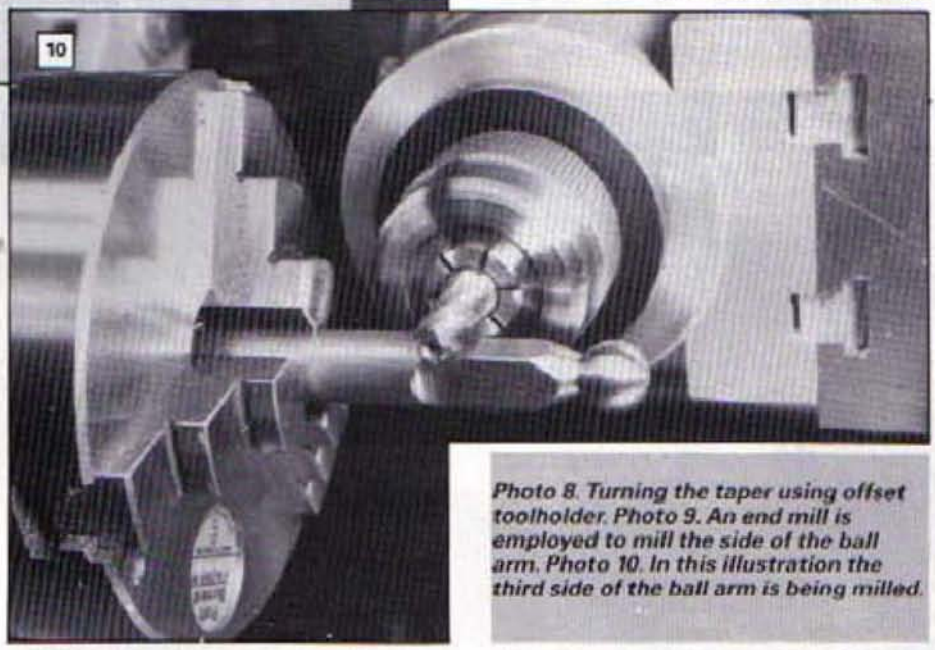

Photo 8. Turning the taper using offset toolholder. Photo 9. An end mill is employed to mill the side of the ball arm. Photo 10. In this illustration the third side of the ball arm is being milled.

The dimension from hole centre to the end of the arm should be $\frac{3}{8}$ in. Part off the ball handle arm. See **Photo 12**. Note the spring cut-off tool. If this dimension is slightly longer, it can easily be corrected after the radius on the end is cut, by mounting in a collet and taking a cut off the end.

The pin holes in the main body should be drilled while the milling head is in this position. Mount the handle body in the chuck and lock in position with the dividing latching arm. Position the centre to a point $\frac{5}{16}$ in. above lathe vertical centre, with the combination square, as shown in **Photo 13**. This will position the pin holes $\frac{3}{8}$ in. apart in the body. Next, move the milling head $\frac{3}{8}$ in. from the end of the handle body, with the carriage hand wheel, and lock the carriage saddle. This will position the pin hole $\frac{5}{16}$ in. above lathe centre and $\frac{3}{8}$ in. from the end of the body.

Mount a $\frac{3}{8}$ in. diameter end mill in the milling head and mill the curved surface to provide a flat surface for drilling. See **Photo 14**. Rotate the work 180 deg. and mill the other surface. Replace the end mill with a centre drill and centre drill both pin holes. Replace the centre drill with a $\frac{1}{8}$ in. drill and drill holes to a depth of $\frac{3}{8}$ in. The micrometer dial on the cross slide is useful for this measurement, convert $\frac{5}{8}$ in. to 0.625 in. and use the direct dial readings. This should not break the surface on the other side of the work. A 3BA tap requires a 0.136 in. or No. 29 drill size hole, so it is advisable to enlarge the hole to a depth of $\frac{1}{4}$ in. While the work is still in the chuck the work can be rotated 90 degrees and the pin holes may be tapped to a depth of $\frac{1}{4}$ in. with a 3BA tap to receive the ball handle pins.

Cutting the slot

Set up the milling equipment on the cross slide, see **Photo 15**. Mount a cutter, smaller than the finished slot, in the milling head and set it to vertical lathe centre. Cut to just under the required depth in as many passes as necessary, rotate the work 180 deg. and make another cut. This will place the slot in the exact centre of the 1 in. stock. Measure the slot and determine how much wider it should be. As the ball arms are cut to size, they may be fitted as the cutting of the slot progresses. Move the cutter in the up direction with the vertical slide to just under half the necessary distance and make a cut. Rotate the work 180 deg. and make another cut. Deepen and widen the slot until the ball arm just clears the bottom of the slot with a $\frac{1}{8}$ in. pin in place. When the ball arm fits, the slot is complete.

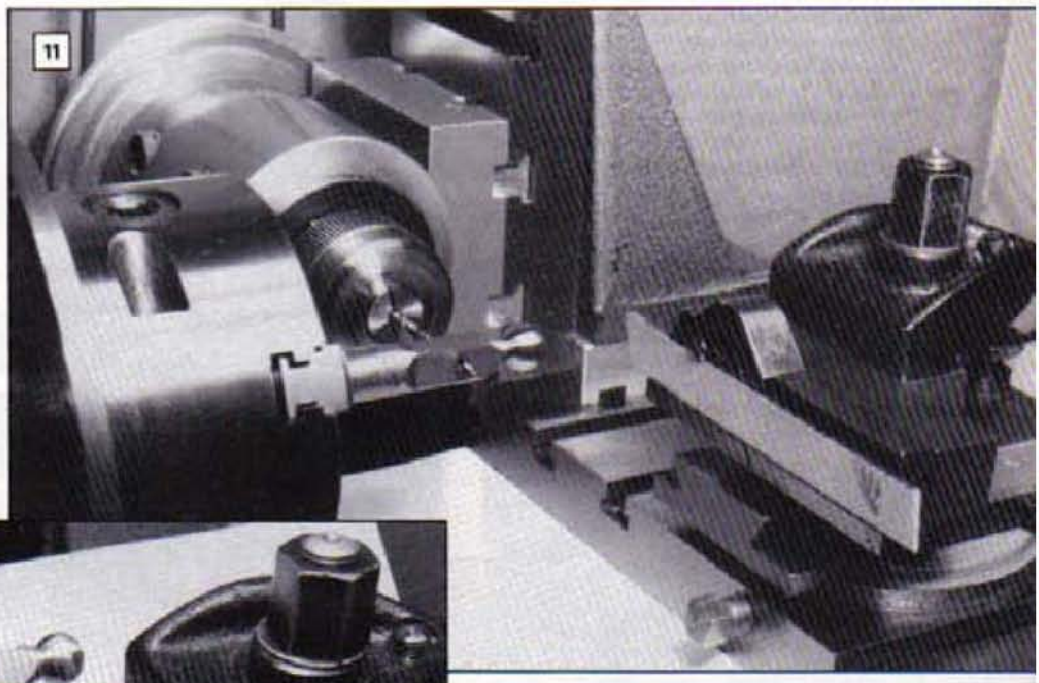

Photo 11. Set-up for drilling the pin hole in the ball arm; start with a centre drill and continue with a $\frac{1}{8}$". Photo 12. Parting off the machined ball arm. Photo 13. Setting the milling head height with a combination square. Photo 14. Milling the flats for the pin holes. Photo 15. With the milling equipment set up on the cross slide, the slot in the handle body can be cut. Photo 16. Milling the countersink in the handle body.

To bore the countersink for the ball handle securing screw, position a milling cutter, smaller than the required hole, to the centre hole. A 2BA cap screw or the original screw may be used. Rotate the work to determine the size of the hole that the mill will cut. Move the cutter off centre, while rotating the work by hand, until the proper diameter is reached and mill to the proper depth for the screw length used. See **Photo 16**.

Put a centre in the milling attachment and bring it to lathe vertical centre. See **Photo 13**. Mount a $\frac{1}{8}$ in. centre in the pin hole so that the tip of the centre is in the centre of the ball handle slot. Move the tip

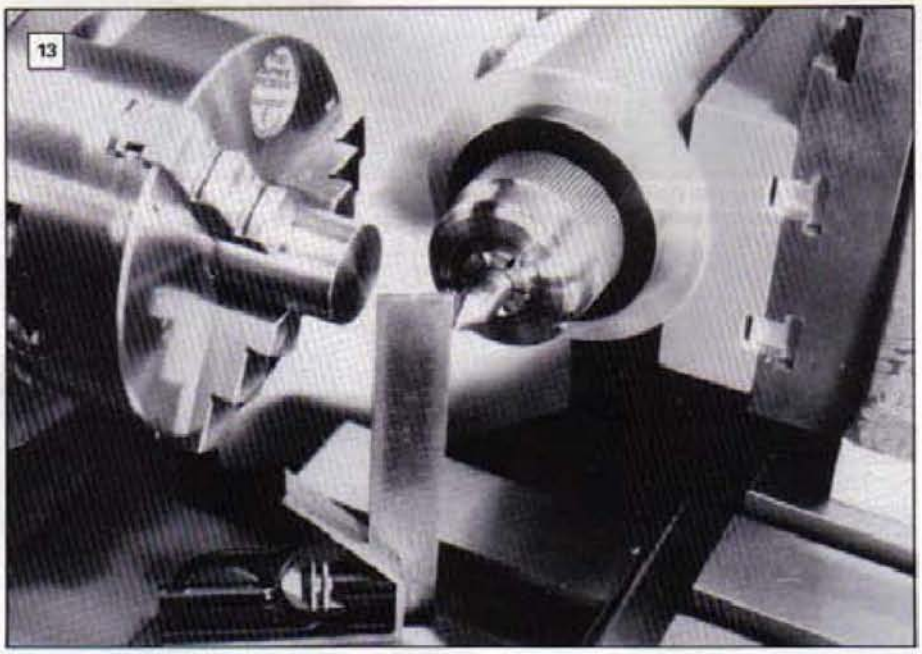

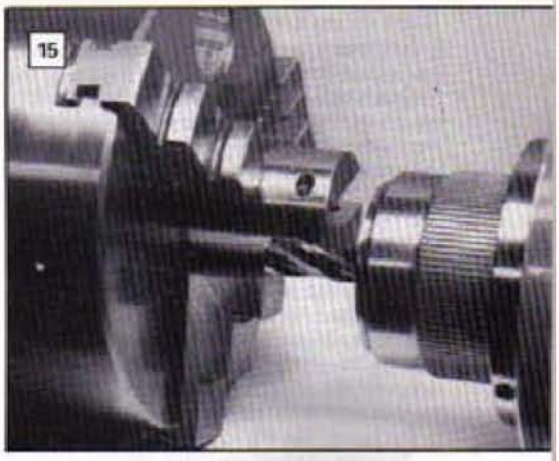

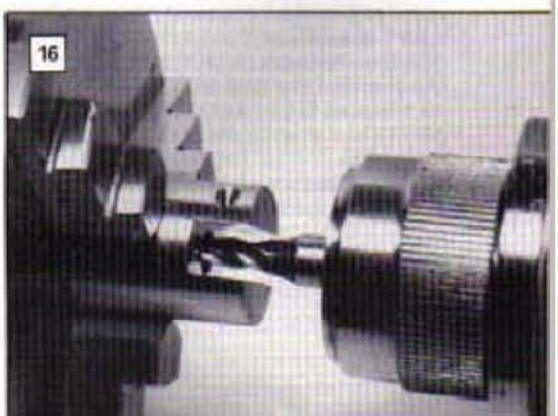

of the milling head centre to the position of the tip of the $\frac{1}{4}$ in. centre in the pin hole. This will place the milling head centre in the centre of the slot on a centre line of the pin hole. See **Photo 17**. This is a view from a position below lathe vertical centre. Start the hole with the centre drill, rotate the body 180 deg. and start the other hole. Complete the holes, through the body, with a $\frac{1}{4}$ in. drill. This is the last cut in this position and the ball handle body may be removed from the chuck.

Cutting the radius on the end of the ball arm can be very dangerous if extreme care is not observed. Mount a piece of hardened $\frac{1}{4}$ in. stock in the chuck and put a spacer between the arm and the chuck. See **Photo 18**. Set the milling head on vertical lathe

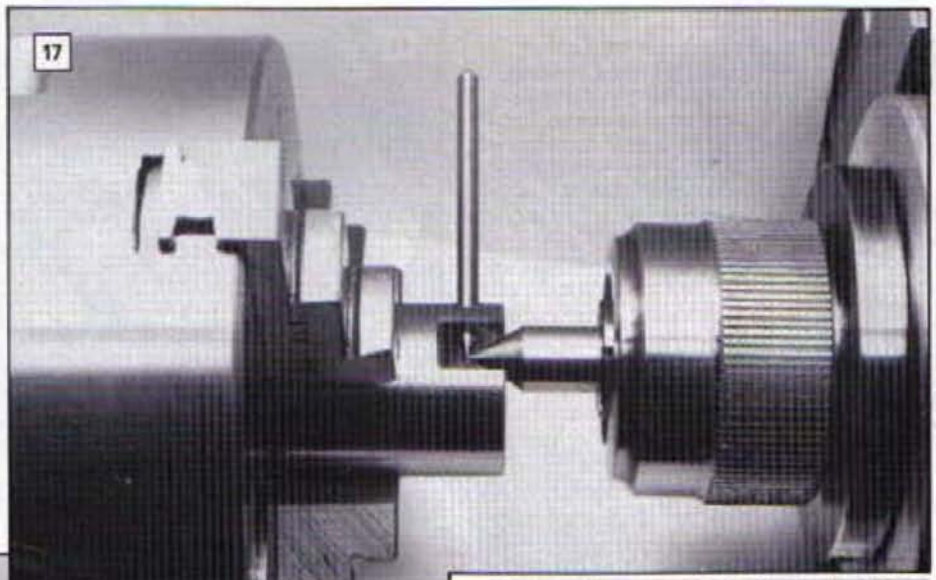

Photo 17 Setting the milling head for drilling the spring holes.

Photo 18. Cutting the radius on the end of the ball arm; a potentially dangerous operation, so take extreme care....

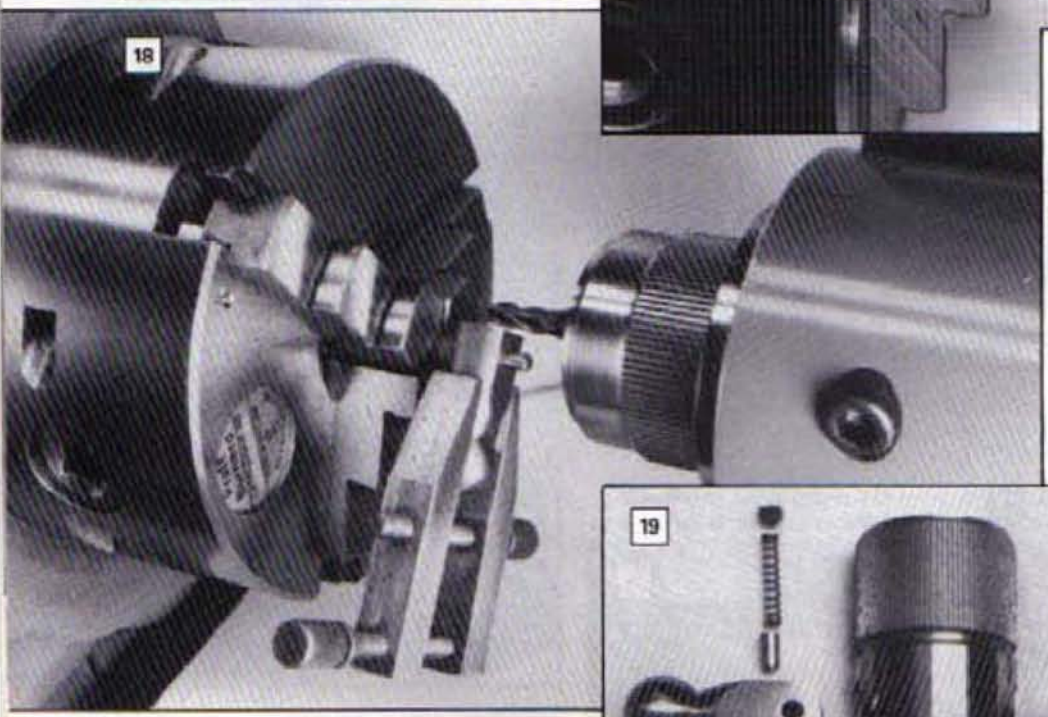

centre. Use a small end mill as this makes the operation much safer. Hold the ball handle arm with a machinist's clamp or hand vice, never with your hand, and move the milling cutter near the end of the ball arm. Note **Photo 19** and remember that you need to cut the side that is flattened and not the side that has the original half round profile. Rotate the ball arm clockwise, against the rotation of the milling cutter, and take a cut off the corner. When the cut is completed, rotate the ball handle arm back to its original position. Continue moving the cutter nearer the arm and removing small cuts until half the end of the ball arm is cut to the radius of the end of the blank. See **Photo 19**.

To make the ball arm pins, mount a piece of $\frac{3}{16}$ in. stock in a headstock collet with 1 in. exposed. Thread the end with a 3BA die a distance of $\frac{1}{4}$ in. Starting $\frac{1}{4}$ in. from the end, turn the stock to $\frac{1}{4}$ in. See **Photo 19**. Measure to $\frac{3}{4}$ in. and part off. Mount the pin in a vice and cut the screwdriver slot with a saw.

The depressions in the ball handle arms for the spring-loaded balls should be 0.020 in. deep. A simple manner of drilling to an accurate depth is to set up a block on the cross slide as in **Photo 20** and use the leadscrew handwheel dial as an indicator. Install the ball handle arms in the body and clamp in the closed position. See **Photo 20**. Drill through the spring holes and make the depressions in the ball handle arms. With the arms in the open position, make similar depressions. See **Photo 21**. In this position the arms will take the correct position provided that the block on the cross slide is perpendicular to the drill.

When the depressions in the ball handle arms are completed, replace the $\frac{1}{4}$ in. drill with a 0.136 in. drill and enlarge the holes to a depth of $\frac{1}{8}$ in. Tap the holes to a depth of $\frac{1}{8}$ in. with a 3BA tap. The 3BA set screws are used to adjust the tension on the springs.

Cutting the splines

If the ball handle arms are recessed too far into the slot in the handle body, take a cut off the end of the body to present a smooth surface in the open position. The decorative cuts on the ends of the handle should be cut with a round nose tool before mounting for cutting the separating slot. To cut the separating slot, mount the ball handle body in the lathe with 1 in. exposed.

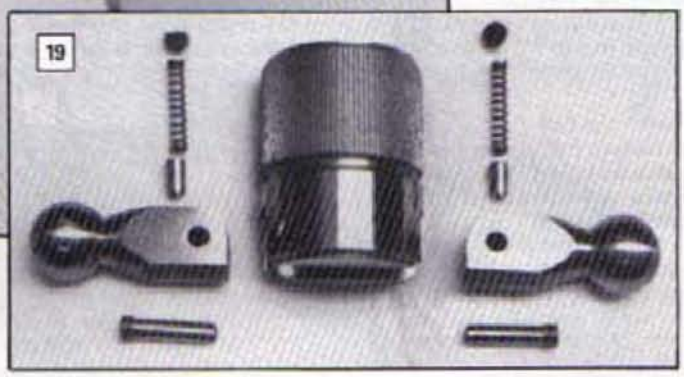

Photo 19. The completed item shown with its component parts in exploded form. Photo 20. Drilling the depression for the spring-loaded balls, arms closed.

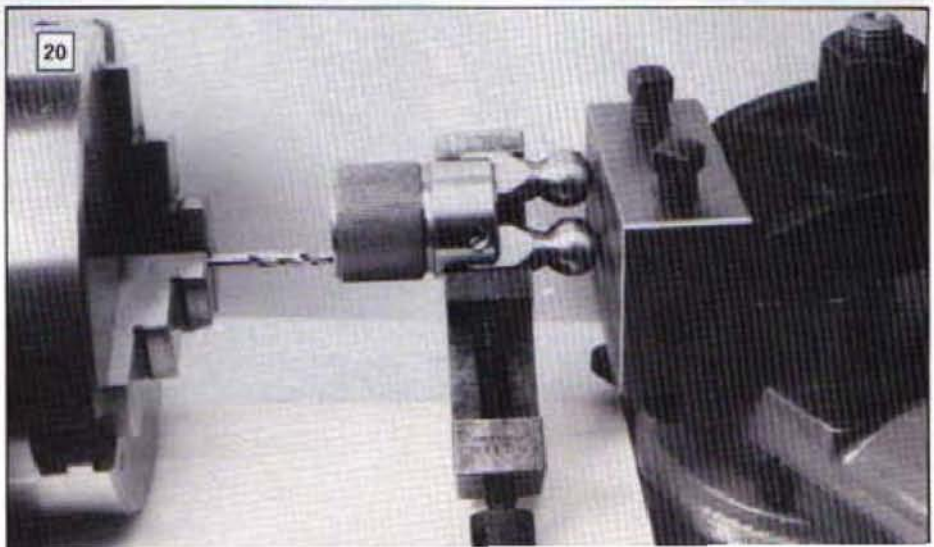

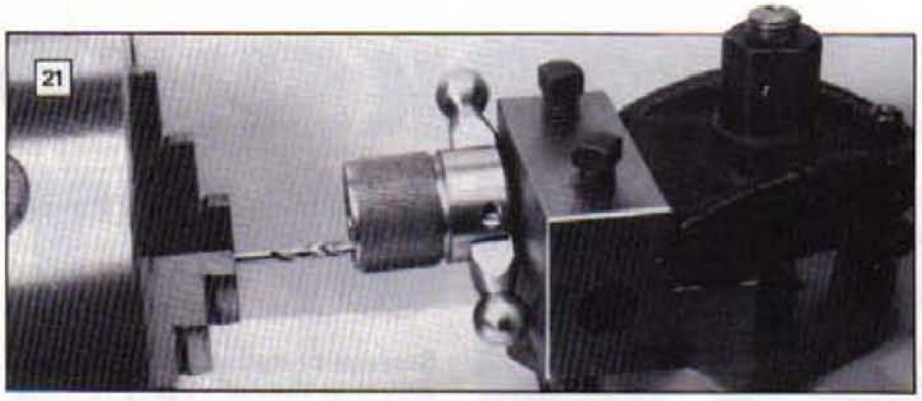

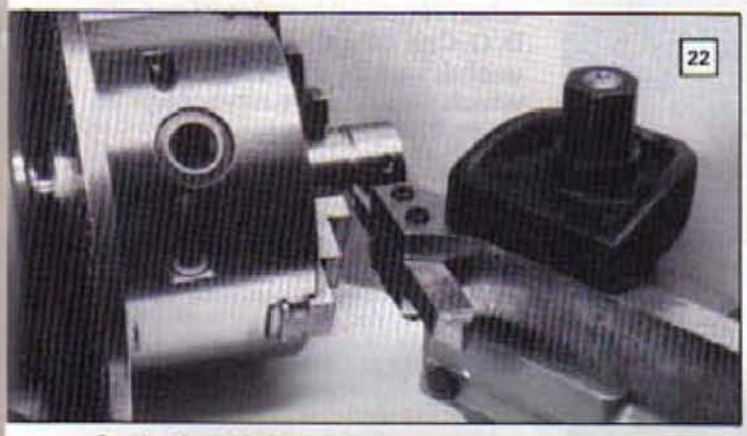

Photo 21. Drilling the depression for the spring-loaded balls, arms open. Photo 22. Cutting dividing ring in body. Photo 23. Cutting grooves in the body. Photo 24. Polishing the body. Photo 25. The completed handle installed.

Cut the slot with the round nose tool to leave $\frac{1}{16}$ in. space for the grooves. See **Photo 22**. Reverse the handle body in the chuck and insert a piece of stock between the work and the chuck body to prevent any movement of the work when cutting the grooves. See **Photo 23**. To insure that the grooves will be of uniform depth, take a light cut off the surface to be grooved with the same tool.

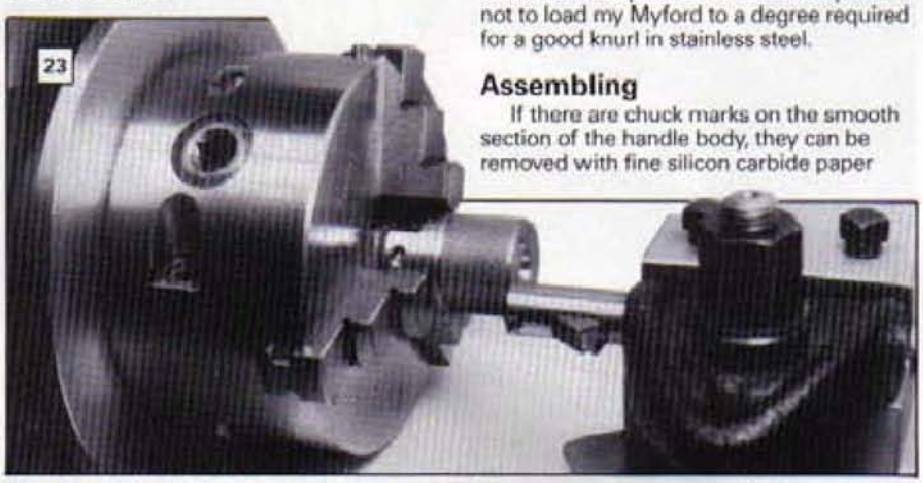

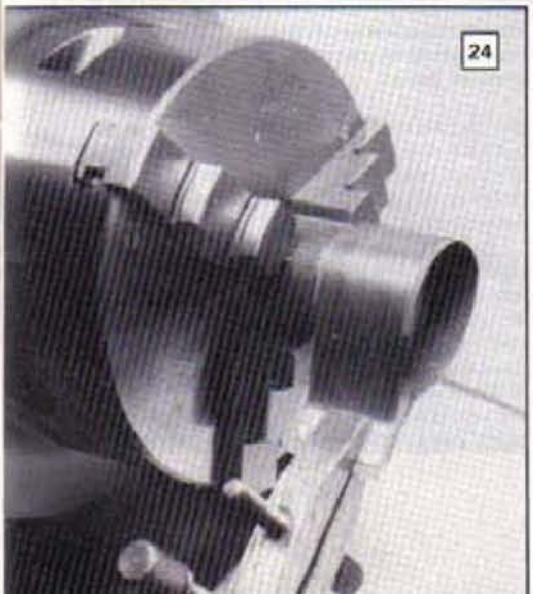

Set up the dividing plate to divide into 50 spaces. Note that the latching arm is in use in **Photo 23** and the divisions on the back of the three-jaw chuck are visible in **Photo 8**. Mount a cutter on the top slide as shown in **Photo 23** and cut the grooves by moving the carriage for each groove. Grooves may be cut full depth with one pass. Knurling this section of the handle would have required less time but I prefer not to load my Myford to a degree required for a good knurl in stainless steel.

Assembling

If there are chuck marks on the smooth section of the handle body, they can be removed with fine silicon carbide paper with the handle body held in the lathe chuck. Apply oil to the abrasive surface to facilitate cutting and prevent the abrasive from escaping. Always cover the top surface of the lathe when using abrasive material. For end surfaces, hold the paper against the work with a smooth metal plate to prevent rounding the edges of the work. When polishing the cylindrical surface, hold the abrasive paper against the work with a strip of thin brass with the paper in contact with at least seventy five percent of the work. This will prevent rounding the edges of the slot. See **Photo 24**.

The slide handle is now ready for assembly. Mount the arms and then insert the balls, springs and the 3BA set screws. The $\frac{1}{2}$ in. range of the set screw should be adequate for adjusting the tension on the ball. Note that in **Photo 19** I have used rounded brass plugs rather than $\frac{1}{4}$ in. balls, as the action is smoother. If the handles toggle too easily, the spring may be tightened or the holes slightly deepened. If the action is too hard, it may be eased by reducing the spring tension or making the depression edges smoother with a file.

After the arms are properly adjusted, mount the handle on the top slide. When tightened down, the micrometer dial should have a smooth action. If the dial is too tight or too loose, the spring washer may be slightly bent. As wear accumulates, thin washers may be added to the diaphragm washer to increase tension. The completed handle is shown in **Photo 25**.

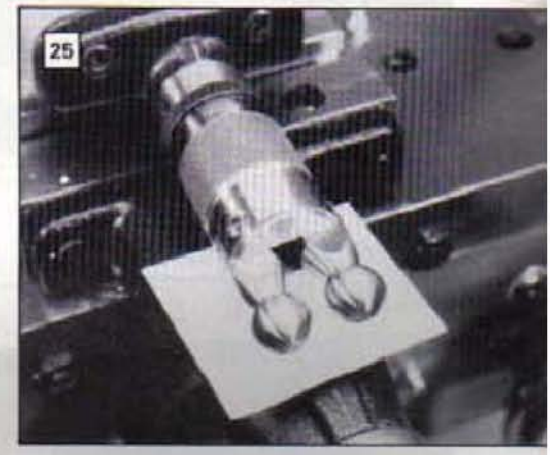

Conclusion

The reason for going into so much detail is that most lathe users have not used milling and dividing equipment on their lathes. The advantage in milling on the lathe has been demonstrated here by the fact that all these operations were completed by positioning the work in the chuck a minimum number of times. Each time the work was positioned, no exact positioning was required. As the milling equipment may be left in position while turning, all of these operations may be completed with a minimum of set-up time. The fact that many of the operations are completed without moving the work, ensures better accuracy. I have had the opportunity to turn out complex jobs on a lathe with milling facilities and on separate milling and turning equipment. I find the lathe equipped for milling and dividing to be far superior when considering time involved and the accuracy of the finished product. For conventional milling, my accessories include a base to mount the vertical slide, with the milling head on the lathe bed in order to use the cross slide as a milling table. This makes a very rigid miller and the capacity is adequate for most of my needs. It compares very favourably to a much larger milling machine in my shop, when working with small complex jobs. Also the headstock is available for use at any time. The gap bed, the large slotted table on the cross slide and the design of the headstock spindle nose make the Myford Super-7 an ideal lathe for milling and dividing. Any lathe is adaptable to milling and dividing and I am certain that you will find, as I have, that many complex jobs become very simple when using a lathe equipped for these operations. Good luck!

A USEFUL WORKSHOP STORAGE UNIT

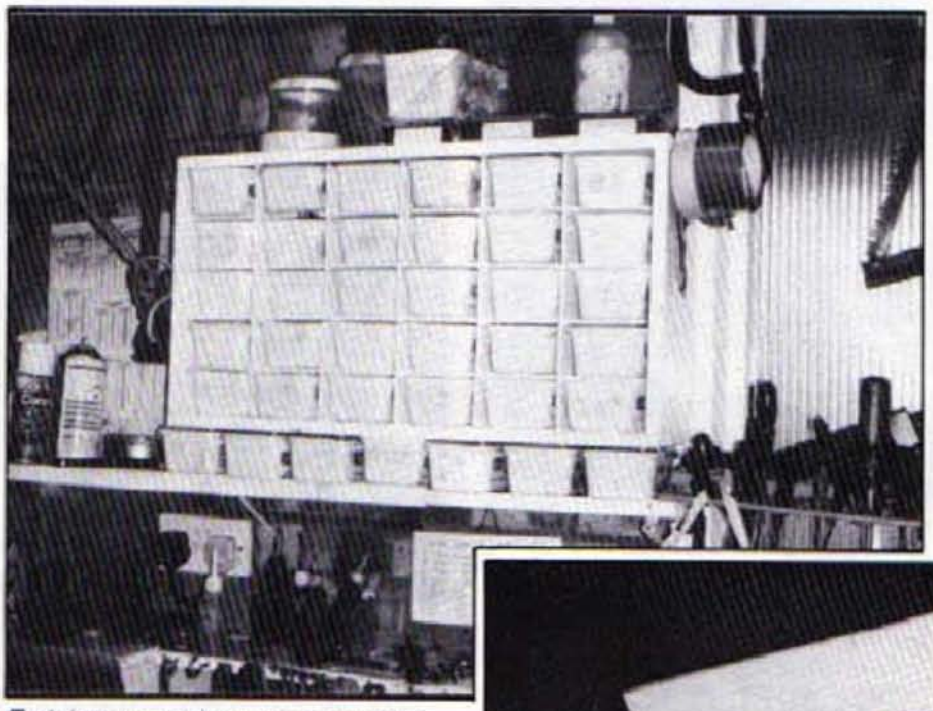

Storage of materials in such a way that they are easily to hand when required is difficult. D. O. Coe describes here a useful, simply made system which also has the advantage of being cheap!

It is important to know where everything is in a workshop; it therefore follows that good storage units are essential. Purchasing such units costs a small fortune and, whilst various units surplus to domestic requirements, such as old kitchen units, can be pressed into service, they never seem very satisfactory. Shelving too can become cluttered all too easily and if you're not careful as the item required is taken down, others come tumbling with it. Small storage units in the form of drawers and boxes are ideal.

Many workshops have a quantity of tobacco tins which were at one time available, but are no longer to the same degree. Anyway, whilst ideal for very small parts, they are no good for larger items. Also, if any number are used, they become difficult to store. Looking round for an alternative, I noticed some margarine tubs. The type used were those sold with St Ivel Gold Spread when new. Other margarines come in similar tubs but I do not know whether or not they are interchangeable...

Having decided that the tubs were the ideal size and having obtained a collection, it seemed that something had to be done to get them organised. I therefore made a unit to hold twenty-four tubs. Making small partitions is not as straightforward as one might think, and I eventually came up with the idea shown. It is not new by any means, but suits the purpose ideally. It is based on the trays used in old type egg and orange boxes and is still used in many cases for packing fruit.

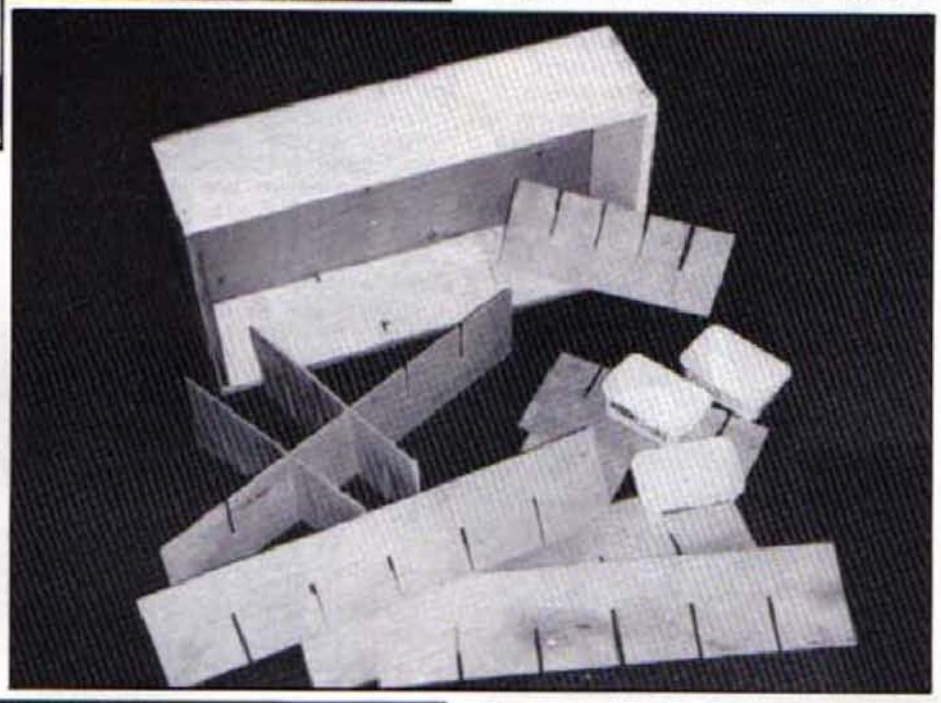

Ply component 'kit' prior to assembly.

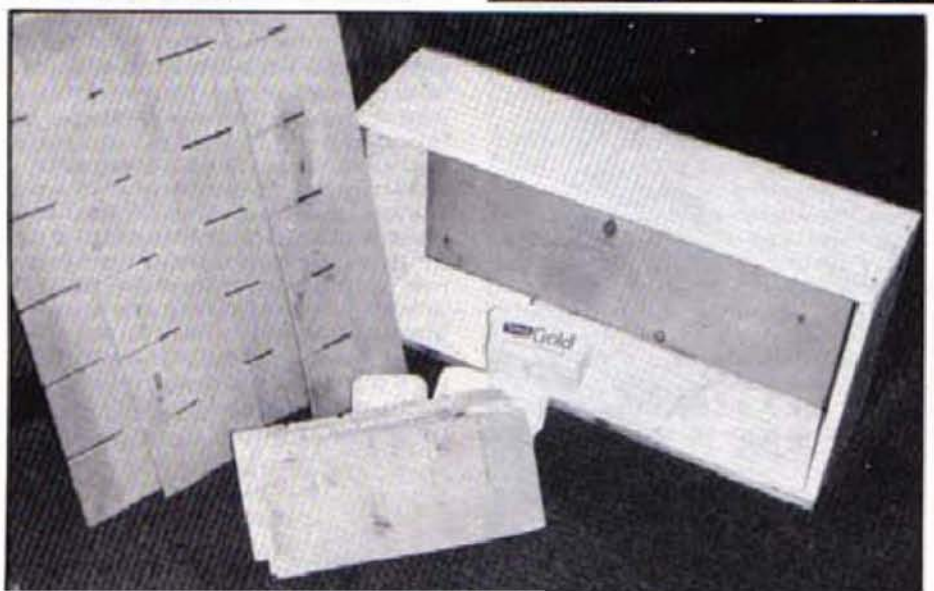

Partitions slide together on the 'egg-box' principle; spacing dimentions suit chosen 'tubs'.

The outer shell was made from 15mm blockboard, but readers can use any reasonable material that happens to be around – ½ in. or 12mm ply, for example, or even solid wood, although there is always the danger in these days of unseasoned timber that the latter will twist. The back of the unit is made from 5mm plywood, but again there could easily be quite good

alternatives, such as hardboard.

The partitions are made from 5mm plywood and there are five verticals and three horizontals. It is essential that some care is taken in making the slots which allow the partitions to fit together. Reasonable accuracy of the slots will allow them to fit easily, but they must also be square. Ideally, a circular saw unit is the best tool to use, but the job can be done on the lathe with a saw in the chuck and the work supported on the cross slide. An alternative, which is a little more time consuming, would be to saw them by hand. Incidentally, as can be seen in the photographs, since making the unit an extra row of tubs has been added.

The units can be screwed to the workshop wall. The tubs are quite robust and are large enough to allow the storage of things like chuck jaws, lathe tools, etc. This makes it an ideal unit for mounting near the lathe. No doubt, some readers will adapt the unit to their own ideas, and a variety of suitable containers are available quite free of charge from the domestic supply.

The finished unit; save those margarine tubs and build one yourself!

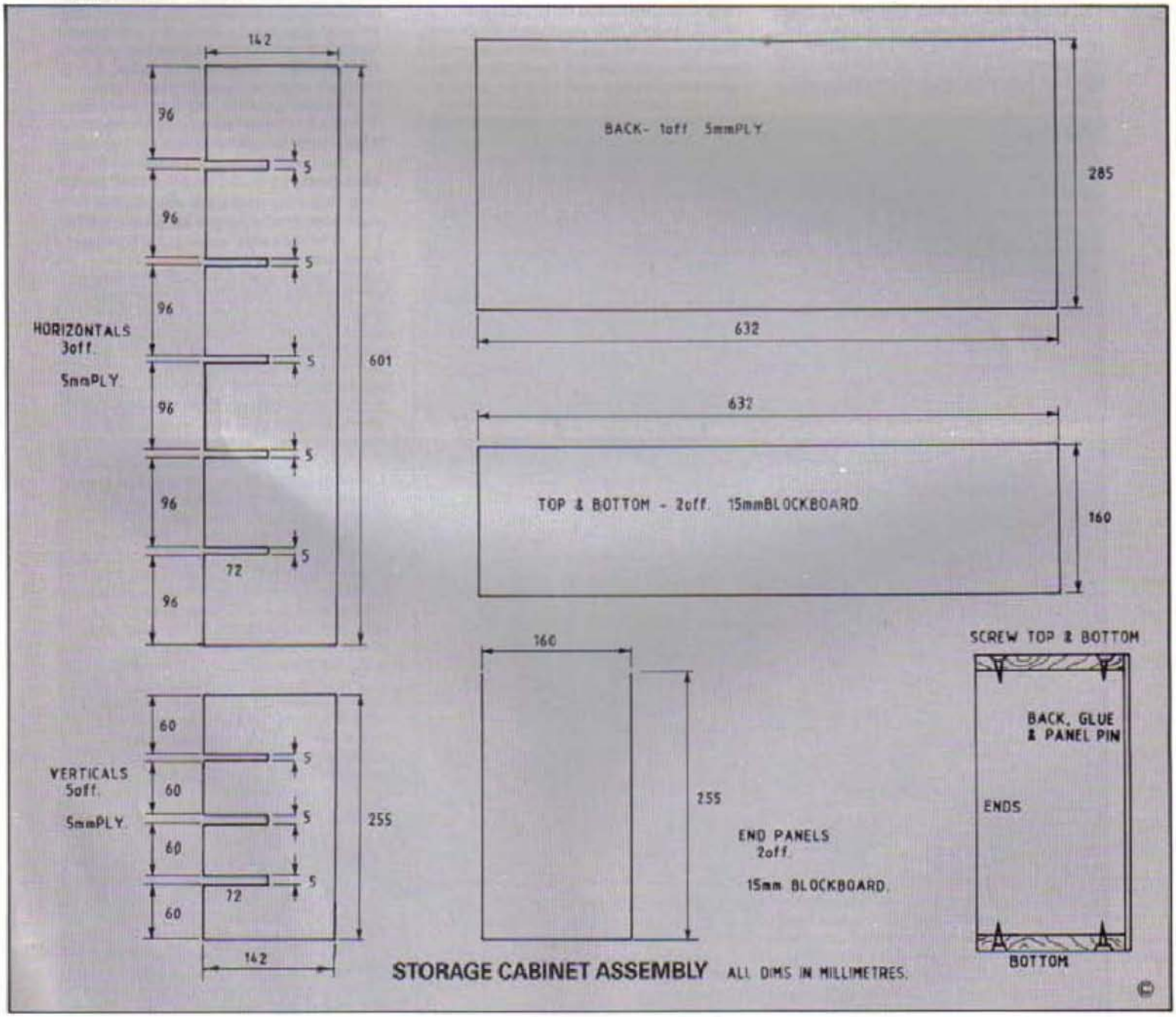

PARTING OFF ON TH

The Hobbymat lathe is excellent value for money but parting off with it is not as easy as one would like. It is always better if the pressure applied by the tool can be directed towards the lower bearing, and it is not immediately obvious how to do this on the Hobbymat. Here L. Maycock gives details of how he coped with it.

Parting-off can be one of the most difficult and troublesome operations undertaken on a small lathe. Chattering and digging-in are common faults, sometimes leading to poor finish, spoilt work and even broken tools. The usual checks of tool height, angles and sharpness plus speed and rate of feed, although helpful, do not always put matters right as most readers will know.

Enquiries for help and advice are usually met with the recommendation to use the tool upside down in the back toolpost. Excellent advice it is too, which I heartily endorse. Unfortunately, both lathes I have owned had neither a rear toolpost nor slotted cross slides enabling such a toolpost to be fitted as an extra. For several years now I have toyed with the idea of drilling and tapping holes in the cross slide for fitting a rear toolpost. This has not been done, however, because I am averse to the risk of carrying out any work that might either weaken a vital part of the machine or render it non-standard and invalidate any guarantee.

The design

There the matter rested until 3 March 1990 when a letter from Mr. F.C. Rickards appeared in *Model Engineer*. He told how he had successfully managed parting operations on an old, badly worn machine, some years ago, by turning the tool upside-down and reversing the lathe. He emphasised the necessity of making sure that the chuck was tight. I was determined to try out this suggestion and was further encouraged by my present lathe, in that it is a Hobbymat which has a bolt-on chuck. This, of course, obviates the danger of the chuck unscrewing itself from the mandrel nose when running backwards.

My first attempt at this procedure was rapidly curtailed because the toolpost on the Hobbymat was much too low to accept my parting tool upside-down at centre height. Modifying the lathe's toolpost would not help very much as it might well interfere with the use of other tools which were not to be inverted. It was therefore decided to make a toolholder for holding $\frac{5}{16}$in. high speed steel parting tool blades upside-down. This was to be so arranged that it could be easily held in a normal toolpost at the correct height with a minimum overhang and with no modifications to be made to the machine itself. The toolholder was then made as shown and described. The method of clamping the blade to the toolholder body, which is made from a heavy section of steel angle has resulted in a very compact robust tool which performs well.

The blade can be used within about 3mm of the chuck jaws and frontal overhang need be no more than the length of blade required for the particular diameter being parted off; unlike some parting toolholders which have a large clamp screw and nut at the front end. Also, the inside angular space, at the right hand side of the toolholder is not obstructed, and allows the vertical portion with blade to be held close up against the top flange of the toolpost. Test results were very satisfactory. Much heavier cuts than I have been able to attempt when using more orthodox methods were easily undertaken, both smoothly and quietly. I am thankful to Mr. Rickards for the valuable tip in his letter which has proved so successful.

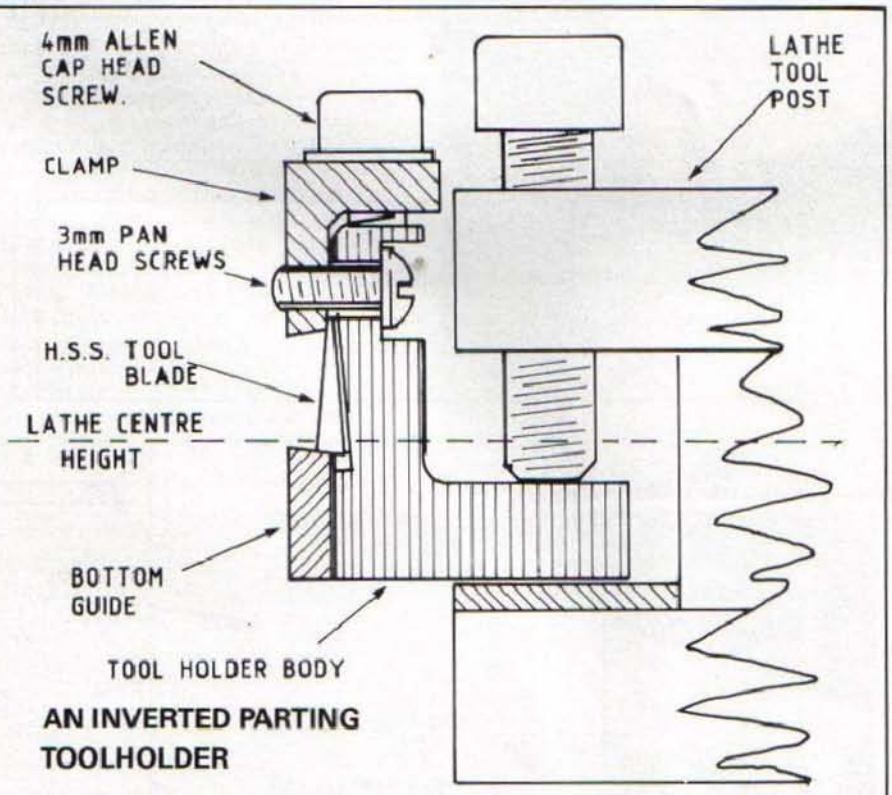

AN INVERTED PARTING TOOLHOLDER

Although not to scale, this diagram illustrates how the use of the panhead screw in the counterbore allows the holder to be mounted as close to the toolholder as possible keeping overhang to a minimum. The cutting edge of the blade being at the bottom, adjacent to the strongest part of angle section and near to the clamping point of the toolpost, no doubt adds to the rigidity of the set-up.

©

The body

To make the toolholder, start on the main body by chucking a suitable length of 1 in. × $\frac{3}{4}$ in. mild steel angle in the four-jaw chuck and machining both ends to an overall length of 60mm. Then take a skim off both large outer sides to make them clean and square. Machine down the narrow $\frac{3}{4}$ in. edge of one large side to leave a width of 23mm. This will become the vertical blade-carrying side of the toolholder. The other side is likewise machined to form the base at a width of 18mm. It might save time here to trim off the surplus metal with a hacksaw.

Three items now require milling to accept the blade of your choice. The angles shown on the drawings were taken by protractor from my own blade and may not necessarily be standard on all makes of blade. I suggest that each individual blade used is checked carefully to ensure that the correct angles are milled. A milling machine can be used, but mine was done on the lathe with an end-mill and the work on a small angle-plate held at the correct angle in the machine vice on the vertical slide.

The body of the toolholder has a very shallow recess at two degrees milled in the vertical side with a 10mm end-mill on a centre line 12mm from the base. It is essential that this recess is as shallow as possible and the cut should only just clean up at the top edge.

The guide rails

Cut a piece of 25mm ×3mm bright mild steel flat 65mm long ready for the bottom guide rail. Mill one edge to six degrees. Refer to drawing and mark out length and width from milled edge, also the holes A, B, C, D & E. Pilot drill all holes 2.5mm. Now cut and file to final size taking care to keep milled and bottom edges parallel. Clamp this guide piece in position on the body

while keeping both in contact with a flat surface such as drilling machine table to ensure alignment. Check that guide is right way round i.e. angled edge at top and widest face away from side of body. Spot all holes through into the body to a depth of 12mm measured from the outer face of guide. Open out holes B & D to $\frac{1}{8}$ in. diameter while the parts are still clamped together, as this pair of holes are to be used for dowelling with short roll pins. After separating, the other holes in body are tapped 3mm. A, C & E. in the guide are opened out to 3.1mm and countersunk. These two parts can now be assembled together permanently using $\frac{1}{8}$ in. diameter roll pins and 3mm countersunk steel screws.

The clamp

The clamp for securing the blade is made from 3mm bright mild steel angle, cutting it to the dimensions shown in the drawing and finishing with a file. The edge of the widest side now has to be milled to an angle of six degrees as shown. The measurement of 12mm for the overall width of this side of the clamp is very important for proper working of the clamp, and allowance for this should be made before milling. If only $\frac{1}{8}$ in. angle is available, allowance for the extra thickness will have to be made for all measurements on this clamp. Offer the clamp up to the body and check that no fouling is taking place on the inside corner. If it is, a few rubs with a file to round off the corner of the body slightly will put matters right. Now mark out and drill four 2.5mm pilot holes in clamp where shown. Clamp the clamping piece in position on the body and spot through the two top holes (in narrow side) only. Enlarge the holes in the top of the clamp to 4.1mm only. The two holes in the body should be opened out to 3.3mm to a depth of 12mm and then tapped 4mm.

Position the clamp with the two 4mm cap-heads screwed part way in and use a small G-clamp to hold the clamping piece lightly against the side of the body. Insert the blade and gently tighten the two Allen screws, checking that the blade is securely held, seating correctly against all three milled surfaces. If all is well, recheck the tightness of G-clamp and screws. Then spot through the last pair of holes into the side of body. The holes in the clamp are tapped 3mm. The clearance holes in the clamp for the 4mm cap-heads can now be opened out to their final size of 4.3mm. The two holes in the side of body are now opened out to 3.7mm and counterbored $\frac{1}{4}$in. diameter on the opposite side to the blade to a depth of 3mm. Assembly is now carried out with 3mm pan head screws 6.5mm long in the counterbores and the 4mm cap-heads 12mm long are provided with plain washers. To install the blade, first tighten the pan head screws until the clamp can only just be moved by hand. Then, after sliding in the blade to the desired distance, the 4mm Allen screws are tightened evenly to secure the blade.

Although this toolholder was made specially for use with the Hobbymat lathe, I do not see why it cannot be used on most other small lathes. But where the chuck has a conventional fitting, i.e. a backplate for screwing direct on the mandrel nose male thread, I feel that some safety device should be used to prevent the chuck unscrewing, as was mentioned earlier.

This could take the form of a split clamp gripping on the shoulder of the mandrel immediately behind the thread of the mandrel nose. The tailpiece of the clamp could be screwed to tapped holes in the backplate. I realise that this idea might not be practical on all designs of lathe, but could well be the basis for some experimental work to provide a suitable safety device for a particular machine.

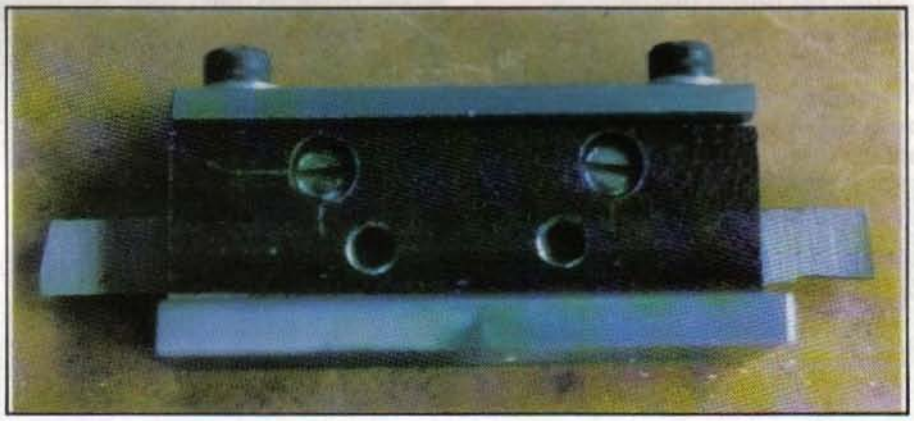

Right, the completed toolholder with inverted parting tool in place. Below, author's Hobbymat with toolholder in position; parting off is accomplished by running the lathe in reverse, an ideal arrangement on the Hobbymat where the chuck cannot unscrew.

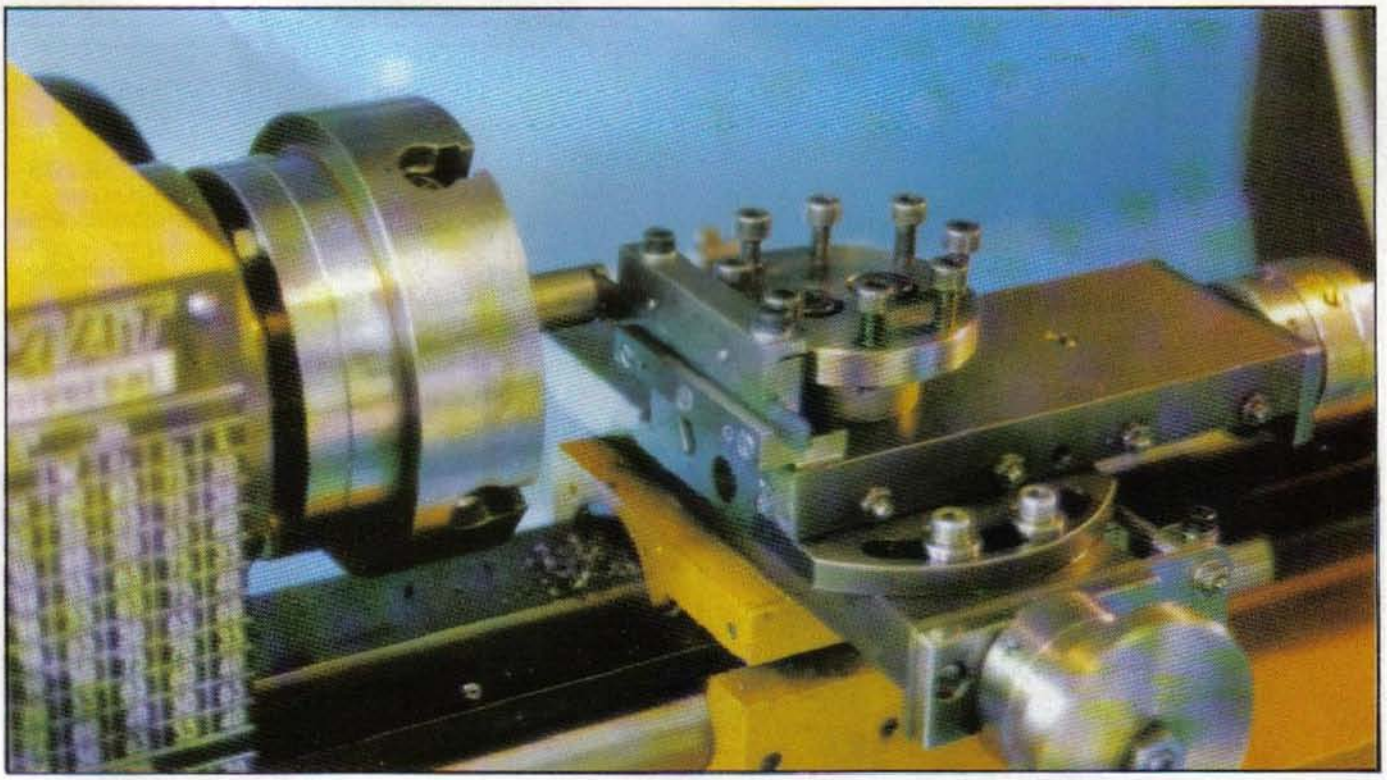

LATHE TOOL HEIGHT GAUGE

Setting a lathe tool to exact centre height is essential for good workmanship. In our first issue we described a simple gauge for doing this; now, a much more sophisticated gauge is described here by Harold Hall. While perfect for accuracy it is not difficult to make from stock materials

Having a few hours to spare recently, I decided to make some small item of workshop equipment. Having seen suggestions for a gauge to assist in setting the height of lathe tools, I thought this would be a good project, but the methods seen lacked the accuracy which I considered desirable.

Accuracy

I decided that it would be nice to know not only that the tool was at centre height but, if not, how much the variation was, to enable suitable packing to be added or removed, confident of achieving the required result. The principle chosen is based on a micrometer type adjustment and accuracy is perfectly adequate over the distance it is required to cover – probably ±30 thousandths of an inch, though it is likely to be quite accurate over a much wider range. The cross piece, **Figure 4**, at the top, is made of two parts riveted together. This permits one face to be up and one face down, both at the same level. The upward-facing section is used for parting tools in the rear post and the

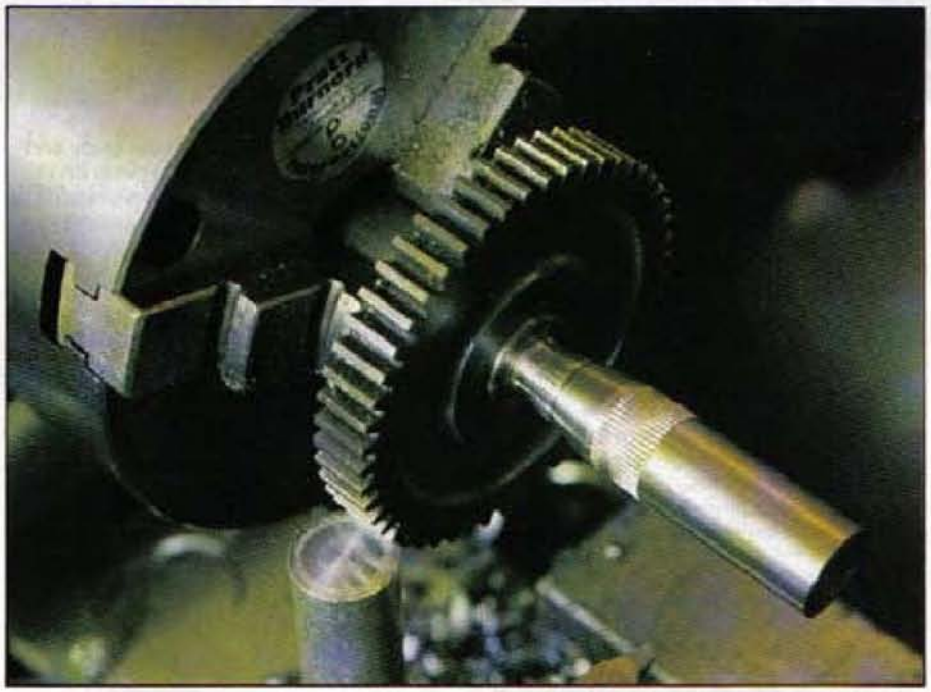

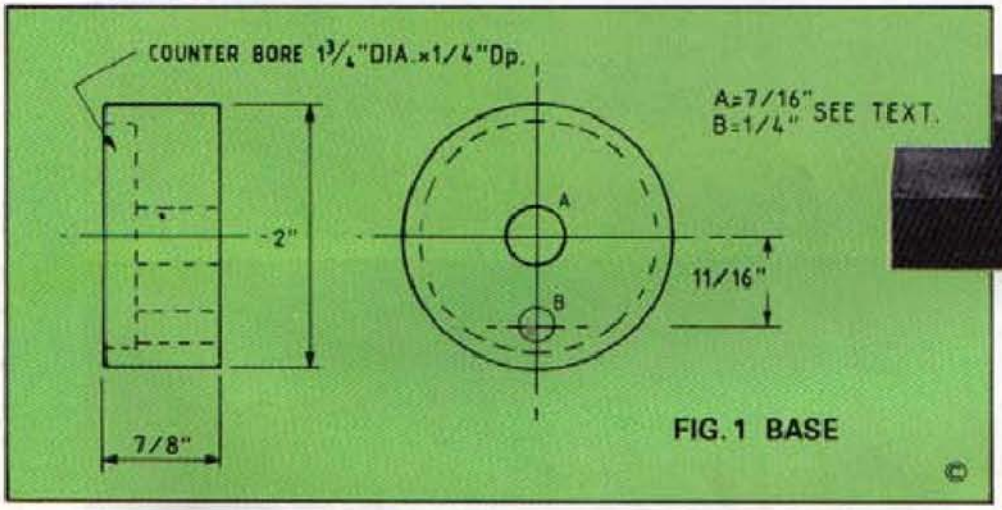

FIG. 1 BASE

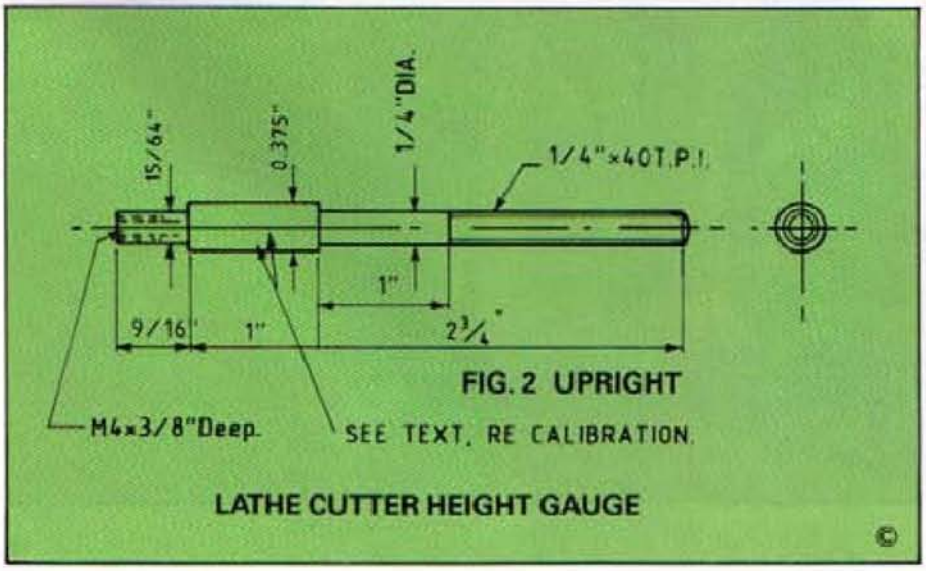

FIG. 2 UPRIGHT

LATHE CUTTER HEIGHT GAUGE

The finished, fully assembled unit illustrated with the cross arm positioned for use with parting tools mounted in the rear toolpost.

downward face for tools mounted on the top slide. The cross piece is held above the barrel with a partially compressed spring washer between plain washers. This permits it both to be rotated to use the face required without rotating the barrel and also (more important) for small adjustments to the height to be made without continually having to loosen and tighten the nut at the top of the assembly, **Figure 6**.

Manufacture is moderately straightforward, but some points are worth noting.

Construction

The base should first be counterbored $1\frac{1}{4}$ in. $\times\frac{1}{4}$ in. and then bored through $\frac{3}{8}$ in. dia. A mandrel should then be turned to be a very close fit in the $\frac{3}{8}$ in. diameter hole and with a slight taper (say $\frac{1}{2}$ degree) part way along which will permit the base to be lightly pushed on with the counterbore nearest the chuck. The mandrel must be made long enough for both faces to be turned without removal. This will ensure that the top and bottom faces are parallel and the upright therefore at 90 degrees to the lathe bed. The outer diameter can also be turned whilst on the mandrel for improved appearance.

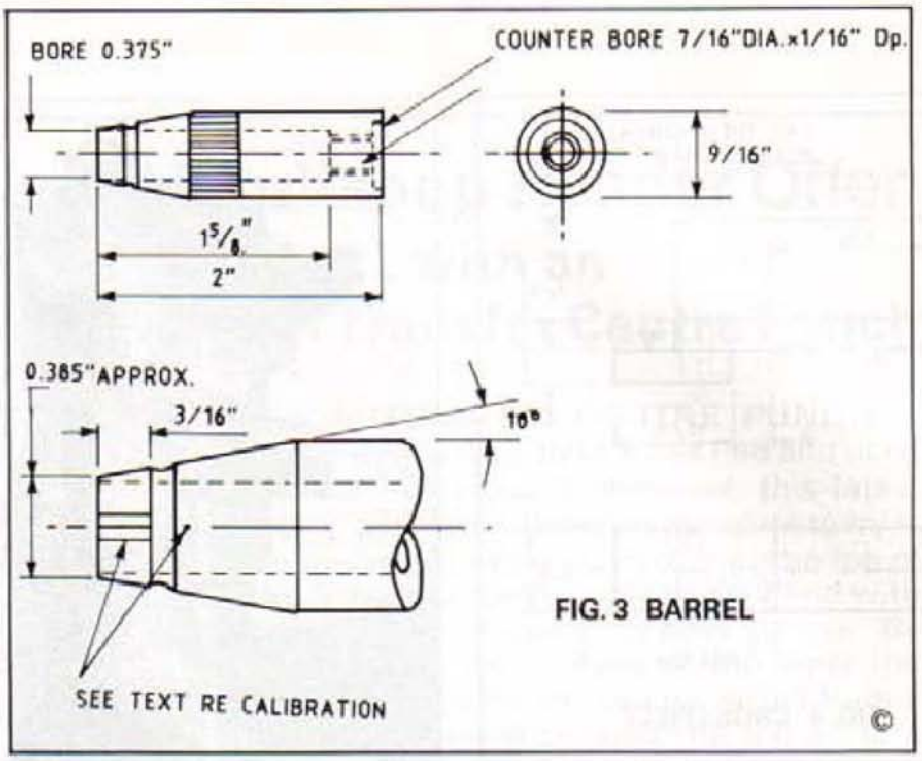

FIG. 3 BARREL

The unit dismantled; note that the two pieces forming the arm are fixed together.

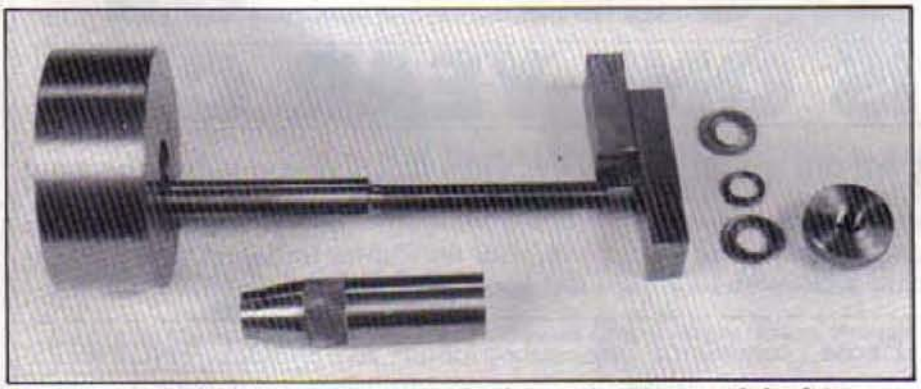

Two flat washers are fitted, one on each side of the spring arm, permitting it to rotate smoothly.

Finished unit: cross arm is positioned for use with tools mounted on the top slide.

For the upright, the thread and larger diameter and similarly the bore and thread on the barrel, must be produced at one stage to ensure concentricity. This will ensure that these run together without binding. Whilst producing the upright, it is worth considering the calibrations, so set a vee tool with a very sharp point on its side to produce the calibration line. To calibrate the barrel, produce a two step mandrel with slight tapers as suggested above. The diameter next to the chuck should be turned to a tight fit on a 25 tooth lathe change wheel, the other a tight fit in the barrel.

With both gearwheel and barrel in place and the top slide set to 10 degrees angle, make one final light cut to ensure the taper section is running true, otherwise the calibration lines will vary in definition.

With a length of material, say $\frac{1}{2}$ in. dia. and about $\frac{1}{8}$ in. to $\frac{1}{4}$ in. less than centre height of the lathe, use this as a strip between bed and geartooth and, with the vee tool as used previously, calibrate with 25 lines around the barrel, using the groove around the barrel and engraving towards its narrowest end, which will prevent the barrel being forced off the mandrel.

Setting the tool accurately

Having completed all the parts and assembled the tool, it now remains to zero the unit at centre height. Place a small piece

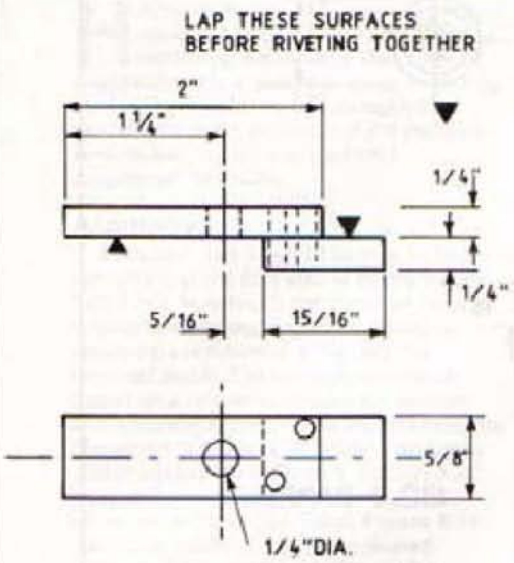

FIG. 4 CROSSPIECE

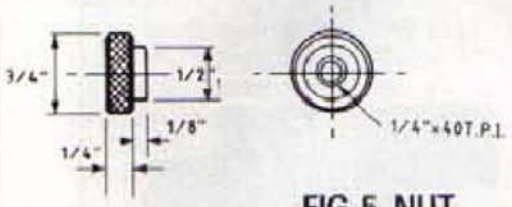

FIG. 5 NUT

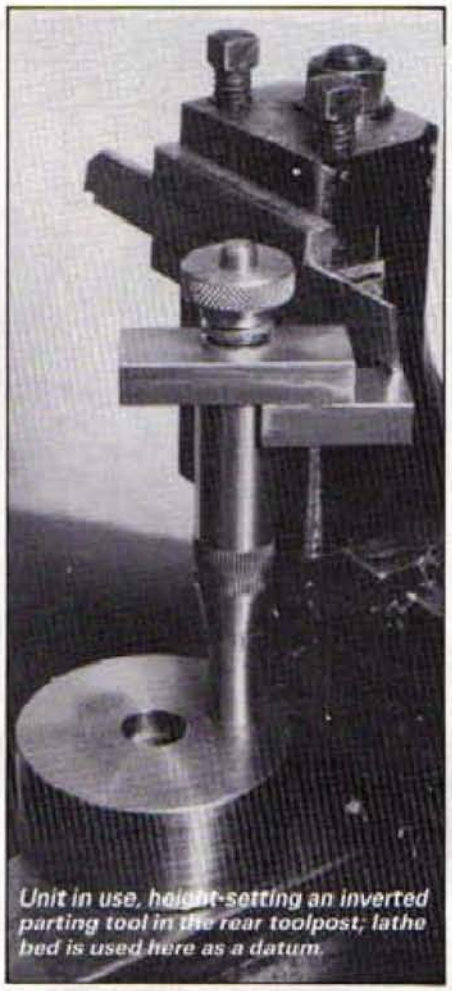

Unit in use, height-setting an inverted parting tool in the rear toolpost; lathe bed is used here as a datum.

of steel in the chuck and turn a short length to 0.050 in. diameter. Adjust the downward facing face to just touch. Make the line on the barrel in line with that on the upright with a centrepunch mark as indicated in **Figure 3**. Turn the barrel down one turn; this is now at centre height. Scribe a line round the upright against the barrel then turn the barrel back and centrepunch on this line to make it more visible.

This is, without doubt, one of the most useful small items of workshop equipment which I have made. The ability to determine that the tool is, say, 10 thousandths of an inch, too low and to add a suitable strip (of which I have many already cut to size and scribed with their thicknesses) knowing that the tool will be at the correct height without the need for a trial cut, is very satisfying.

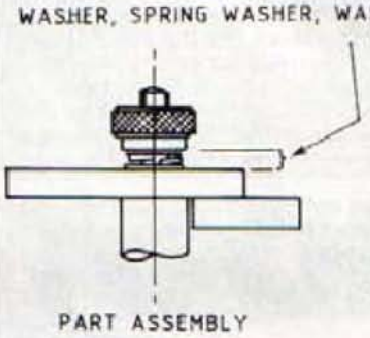

FIG. 6 LATHE CUTTER HEIGHT GAUGE

MODEL ENGINEERS'
WORKSHOP
IS ONE YEAR OLD

So, we are giving away ONE FREE ISSUE if you subscribe now.

To make sure you receive 7 issues for the price of 6, just complete the coupon below and send it with your remittance to: Select Subscriptions Ltd., 5 River Park Estate, Billet Lane, Berkhamsted, Herts. HP4 1HL.

SUBSCRIPTION RATES

U.K. £15.00 EUROPE £18.90
MIDDLE EAST £19.20
FAR EAST £21.10
REST OF WORLD £20.30
USA $38.00
Airmail rates upon request.
Overseas rates include postage.
This offer is open to existing subscribers who wish to extend or renew their subscription.

Please commence my subscription to MODEL ENGINEERS' WORKSHOP with the ..... issue plus ONE ISSUE FREE. I enclose my cheque/money order for £..... payable to ASP or please debit my Access/Visa

Signature ..... Expires .....
Name .....
Address .....
.....
..... Postcode .....
MEW/6

Model Engineers' Workshop Reader Offer

Get to the point . . . with an Automatic Centre Punch & A Transfer Centre Punch

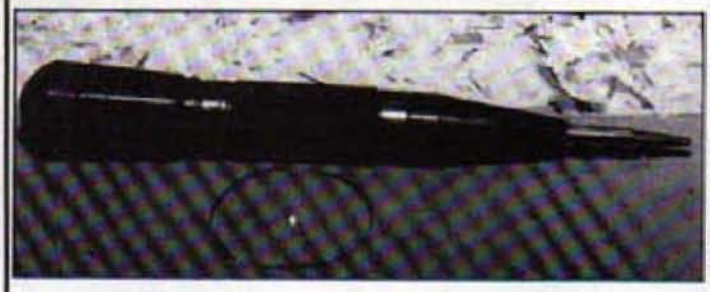

The **AUTOMATIC CENTRE PUNCH** is nothing new, Ted Jolliffe has had and used one for many years. However, this latest model which has been his pleasure to try is unique in his experience in that the top of the handle is comfortable to hold and with its excellent shape it is easy to use. By twisting the two halves of the body the blow from the punch can by varied from a pin prick, barely marking the metal, to a heavier strike, giving a very positive dot.

The **TRANSFER CENTRE PUNCH** is one of those tools which are less often required, but which are so useful on occasions. It is used for "spotting" from an existing large hole through to the centre on the other piece requiring drilling. Oft times this is somewhat of a risky operation, use of this tool ensures absolute accuracy each time. The reverse taper on the handle section is placed over the large hole, tilt is avoided as this section is spring loaded, and the larger diameter base is pushed down to provide a level seating. The punch is then pushed up to the work and struck with a hammer, giving a positive centre dot, which only needs enlarging ready for drilling.

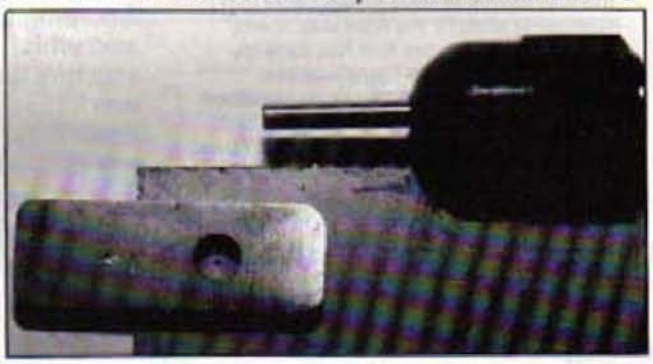

Both tools are of high quality and are British made. The Readers' Service Dept. have worked out a very special deal for your on these two items.

Price of the **AUTOMATIC PUNCH** alone is £9.25.
Price of the **TRANSFER PUNCH** is £7.92
Buy the two together and save money, the combined price is £16.20 inc. p&p and VAT.

Telephone orders . . . just call us on 0442 66551 (24 HRS)

Coupon to: **Model Engineers' Workshop Readers Offers, Argus House, Boundary Way, Hemel Hempstead, Herts HP2 7ST**

COUPON

Please supply ..... AUTO C.P./ROME/38 @ £9.25

Please supply ..... TRANSFER C.P./ROME/39 @ £7.92

Please supply ..... BOTH ROME/40 @ £16.20

I enclose cheque/P.O. for £ ..... payable to ASP or debit my

Access/Visa ..... / ..... / ..... / .....

Signature ..... Expiry Date .....

Name .....

Address .....

.....

.....

..... Post Code .....

Please allow 28 days for delivery U.K. only (overseas upon request).
Model Engineers' Workshop Reader Offer, Argus House, Boundary Way, Hemel Hempstead, Herts HP2 7ST.

SCRAPERS

Scraping is an art which was essential in engineering at one time and which all apprentices were required to become proficient in. It still has its uses in the home workshop and if one has to scrape work then it should be done correctly and efficiently. R. J. Loader describes, in a light-hearted way, how he learned, and passes his expertise on to readers

I saw an unusual sight on television recently in a programme about industry. A man was scraping a machine slide. In these days of mass production and ground slides it was a rare sight and it took me back 40 odd years to when I was fairly well on with my apprenticeship. A few of us older apprentices were put into the toolroom, one at a time, to learn to scrape. We were taught by a man who had scraped for a living at Archdales, the machine tool makers.

The task was to scrape a small surface plate about 12 in. by 10 in. on the working surface, with a smaller base, which made a recess at each end for fingers to get in and lift it. The plate was 2½ in. thick and quite heavy; when finished, it was ours to use. It had to be machined flat, parallel and square first and it was done on the Butler shaper, which normally did the bolsters. A shaped finish is ideal to scrape, it gives something to get hold of – that's what we were told by the toolmakers and they smiled a quiet smile while they said it....

There was no nonsense about drawing a scraper from the stores. Charlie, the ex-Archdales expert, found an old 10 in. hand file and we took it to the blacksmith, who forged it to shape and hardened and tempered it. It was then roughly ground to shape and the teeth ground off the edges; this was important because the sharp edges can hurt. Charlie then showed me how to sharpen the scraper – more about that later because there is a special way of holding it.

Charlie started me off on the bottom surface first and almost stood over me for the first couple of days making sure that I was going about it the right way. It was hard work and for the first few days my right arm ached from finger tips to shoulder and my hands became ingrained with a cocktail of red lead, cast-iron dust and engineer's blue. The red lead was used to smear on the plate before blueing, to make the blue spots show better.

When I began to get the hang of it, I was allowed to start on the working surface and, after a lot of hard work, the plate was finished to a standard of 20 spots per square inch. Square inches were ritually marked out at random on the plate and the spots counted to make sure. The toolmakers were only too happy to test for me. As a few days of my month were left, I scraped one of the toolmaker's plates, a larger one, 18 in. by 12 in. or thereabouts; toolmakers always work on the principle that you don't keep a dog and do your own barking.

That was my introduction to what is a very good method of getting a surface flat. It isn't a skill which I've used frequently and if I want to do some scraping I have to practice first, but I soon get the touch back and can still get a surface quite flat.

Reasons for scraping

Surfaces are scraped mostly for accuracy. Especially where filing isn't good enough for finish or flatness. Gib strips, machine slides and flat bearing surfaces can all be scraped and high spots or patches picked off without touching the rest of the surface. It also breaks up a surface which would otherwise be 'sticky' because it is too flat, like a ground one. The very small depressions made also create oil pockets. Scraping can be decorative and improve the appearance of a finished part no end by scraping a pattern. The two usual patterns are feathering, which is a series of crescents, and chequer, which is a chessboard pattern. Of the two, chequer is the easiest to do. I could feather once but would need a great deal of practice these days.

The process is most effective on the more brittle metals and the best of the lot is cast-iron.

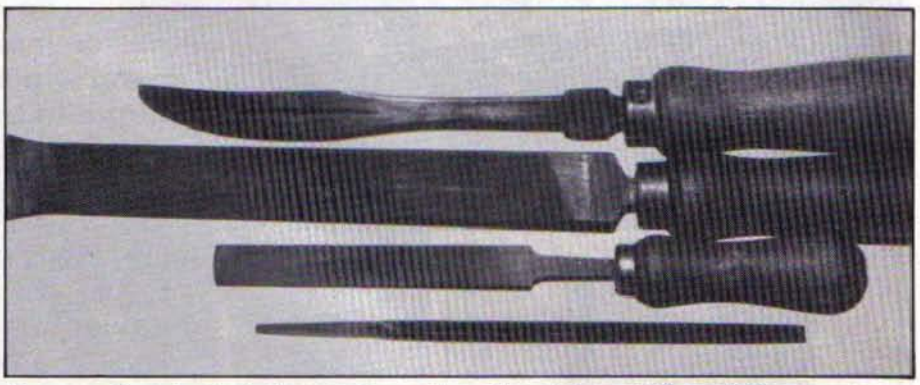

Scrapers: from top to bottom, half round, medium flat, small flat and three square – all made from old files.

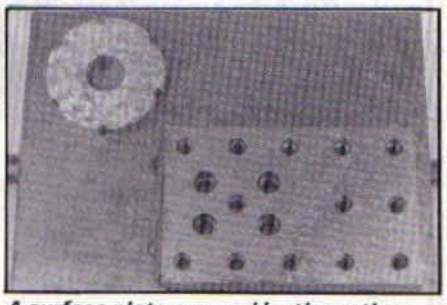

A surface plate scraped by the author, with a small lathe milling table and a disc, the latter chequered.

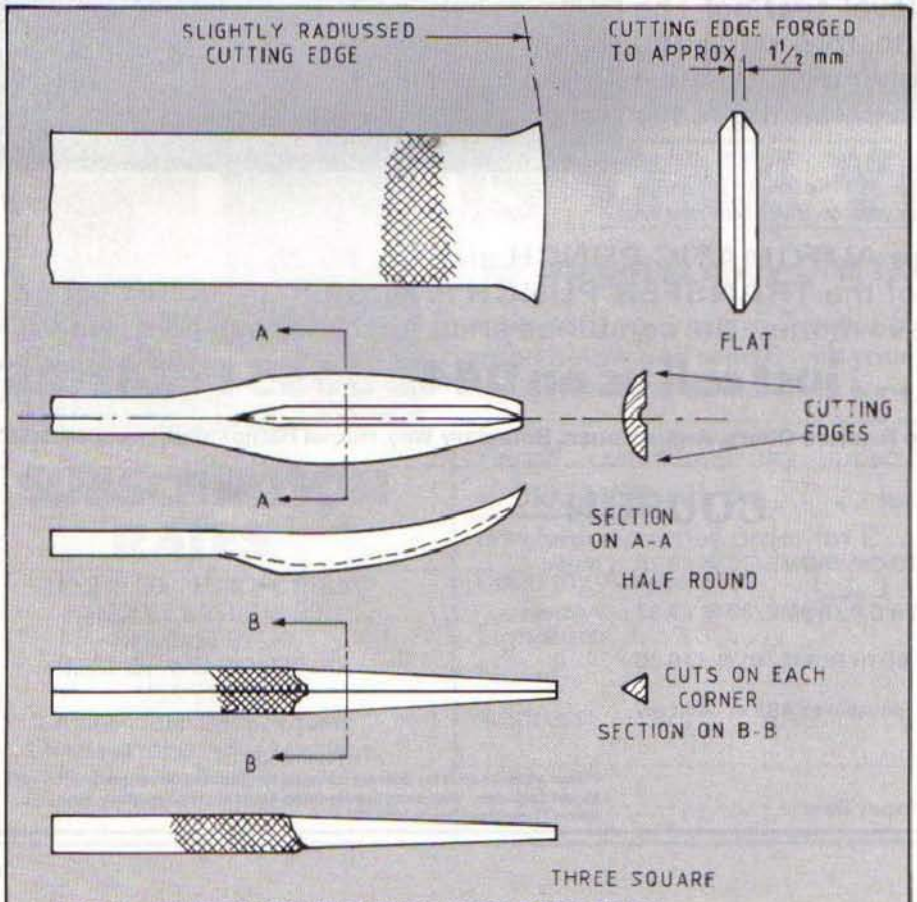

FIG. 1. THREE COMMONLY USED SCRAPERS

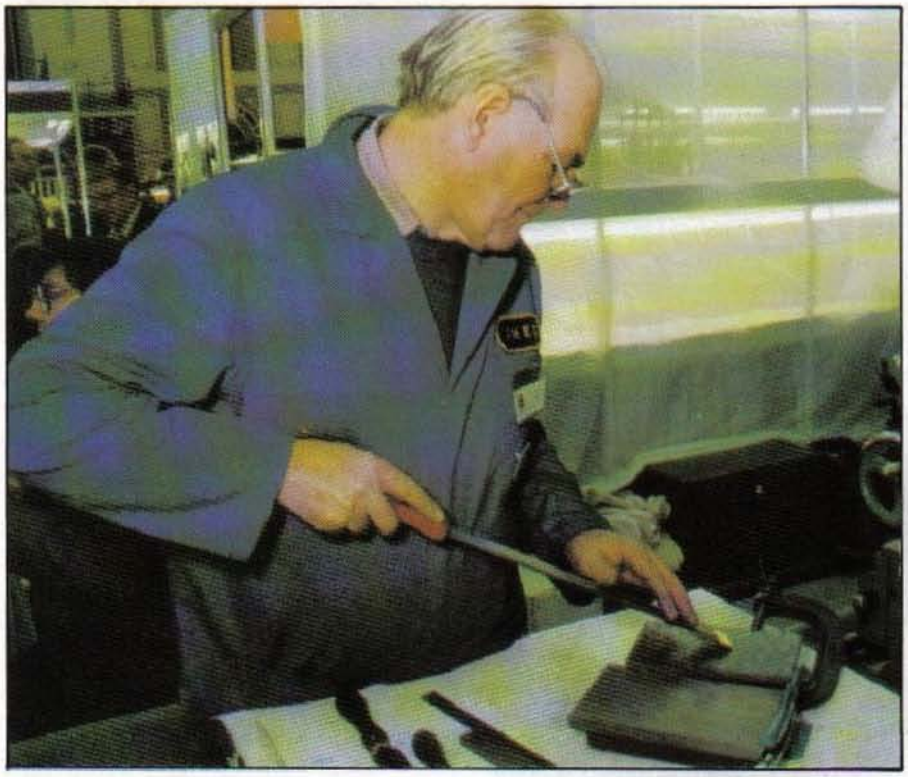

Scraping demonstrated at the 1990/91 ME Exhibition.

The tools

Scrapers can be bought but the steel they are made from is of the same type as files are made from, so it is an ideal use for worn out files.

A three-square is the easiest to make. Just select a three-square file which is past its best, grind the teeth off the first inch or so, then stone to a fine finish. As well as being the easiest to make, it is the easiest to use because it is a deburring tool, used for holes and curves. I use two sizes, one made from a double-ended saw file, which has sides of about ¼ in. The other one is a miniature one for very small holes, made from a broken three-square Swiss file.

The half-round involves a bit more work; an old 6 in. or 8 in. half-round file will be suitable. First soften the file by heating to bright red and leaving it to cool in the hearth where it was heated, so that it cools as slowly as possible. When cold, it can be filed to get rid of the teeth and shaped with a recess in the flat face. To bend it to the radius it will need heating to a bright red or orange and tapping round curve. The completed shape is shown in **Figure 1.** Harden by heating to bright red, quenching in water vertically, then temper to the palest straw colour possible. Stone to a fine

S & SCRAPING

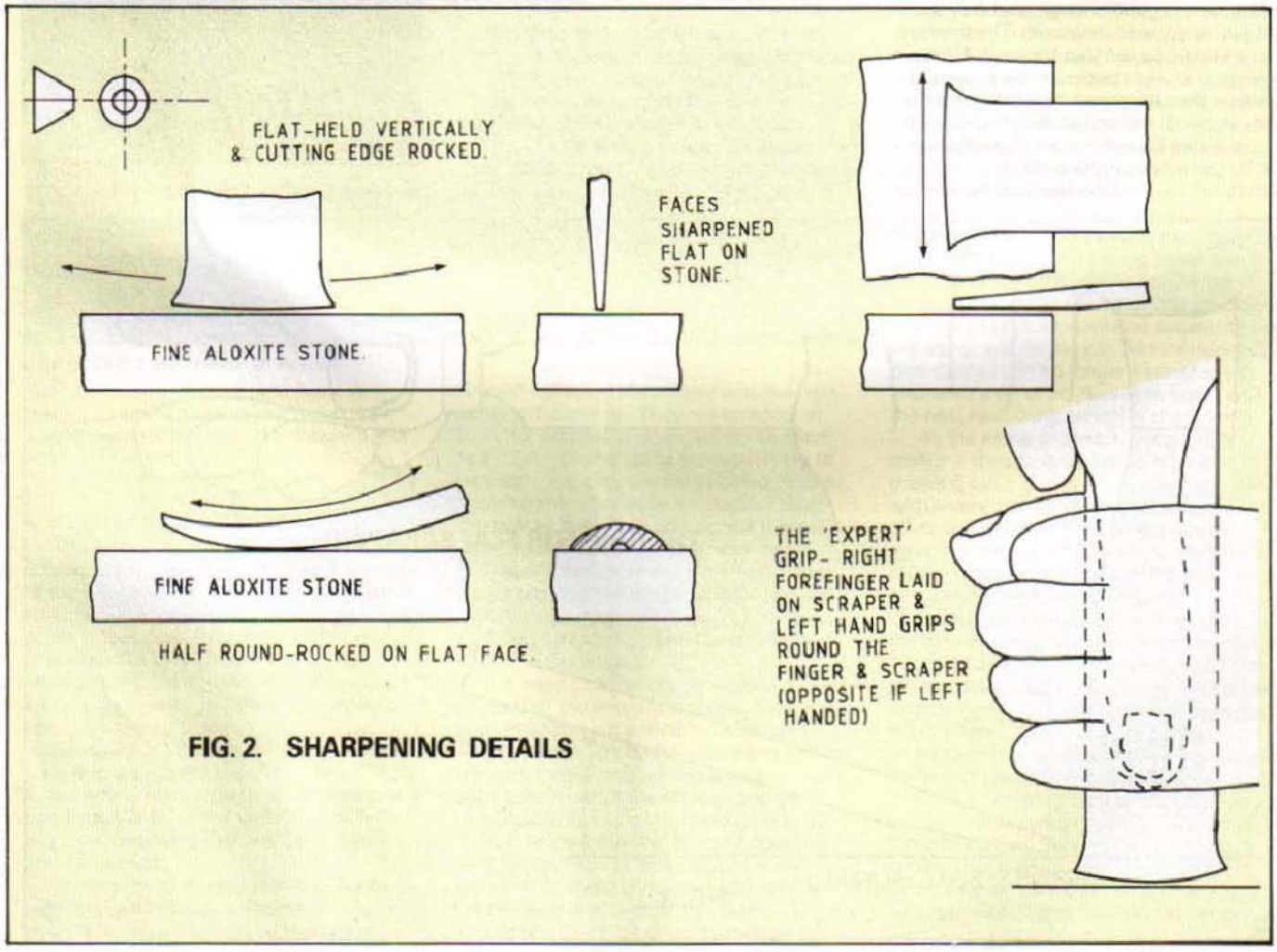

FIG. 2. SHARPENING DETAILS

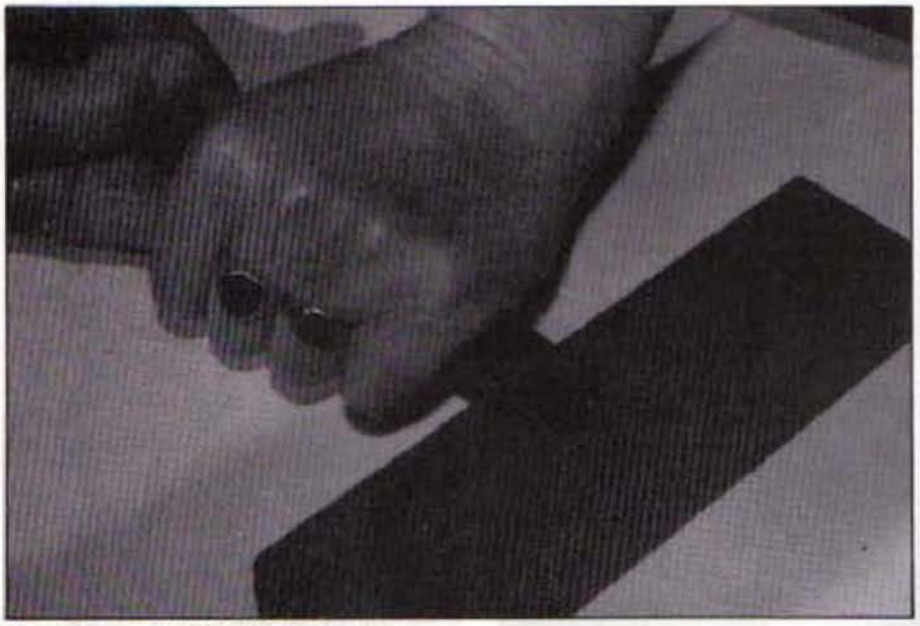

Sharpening the sides of a flat scraper.

finish on a fine oilstone.

Half-round scrapers are used for picking off the high spots from large bearings or bores which shafts have to fit precisely, such as the arbor bushing of a horizontal milling machine or the spindle bearings of a lathe which has solid bearings. They can also be used for deburring large holes and curves, among other things.

Flat scrapers need a bit more work because they have to be forged to spread the cutting edge and thin it down. Forging temperature is *at least orange*, yellow if the heat source is good enough, and only the first ¼ in. or so need be heated. The finished shape should be like that shown in **Figure 1**. When cool, the tip can be rough ground to shape then hardened. To harden, get the first ¼ in. bright red and scaling and quench in cold water. *Do not temper*, the edge will last longer between sharpenings. Remember to grind the teeth off the edges, especially where it will be held.

Sharpening

The sharpening of any tool is important because the finish will only be as good as the finish on the tool. For flat scrapers, especially, it is critical – so this one comes first. It has to be stoned on the faces and the edge to as high a degree of sharpness as possible. Rough stoning can be done with a medium stone, but the finishing should be on an aloxite stone of *as fine a grit as possible*, using plenty of oil or paraffin.

There is a special grip which Charlie the expert showed me; he insisted on that grip for the best results. I didn't question it 40 odd years ago and nothing has changed my mind since, so **Figure 2** shows the grip and method. The way a scraper is sharpened varies slightly from person to person and it is unlikely that anyone could scrape effectively with anyone else's scraper.

After sharpening, any oil or paraffin should be wiped off with a rag. Resist the temptation to try the edge with thumb or finger, it will dull it.

The half-round is sharpened by rocking it to and fro on the fine oilstone with oil or paraffin just the same as the flat except that there is no special grip. The curved side should need no treatment.

Once a three-square scraper has been finely stoned, it will only need an occasional rub on a fine stone to keep the edge in good condition.

Take care when handling scrapers, the cutting edges don't look very sharp but if handled the wrong way they can cut fingers very well. Try to keep them apart

The small milling table in position.

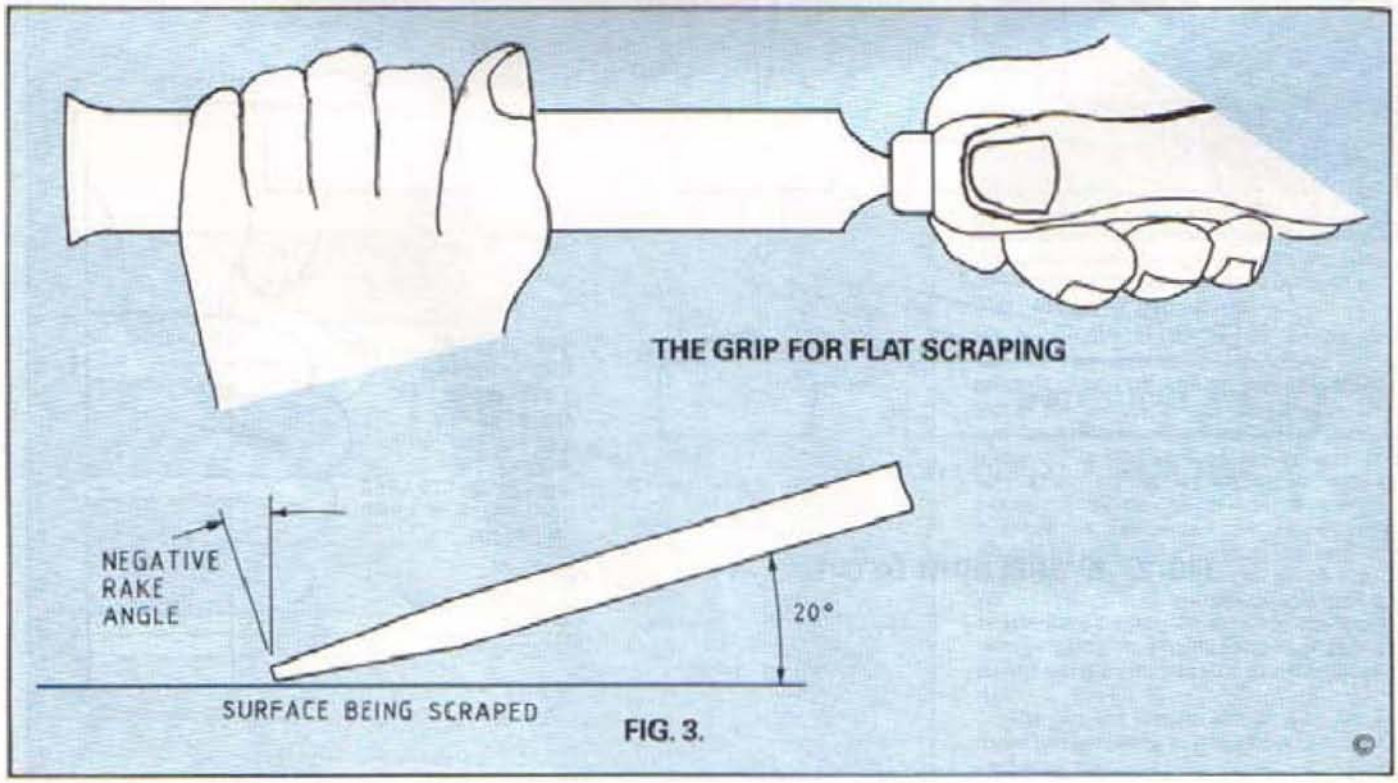

FIG. 3.

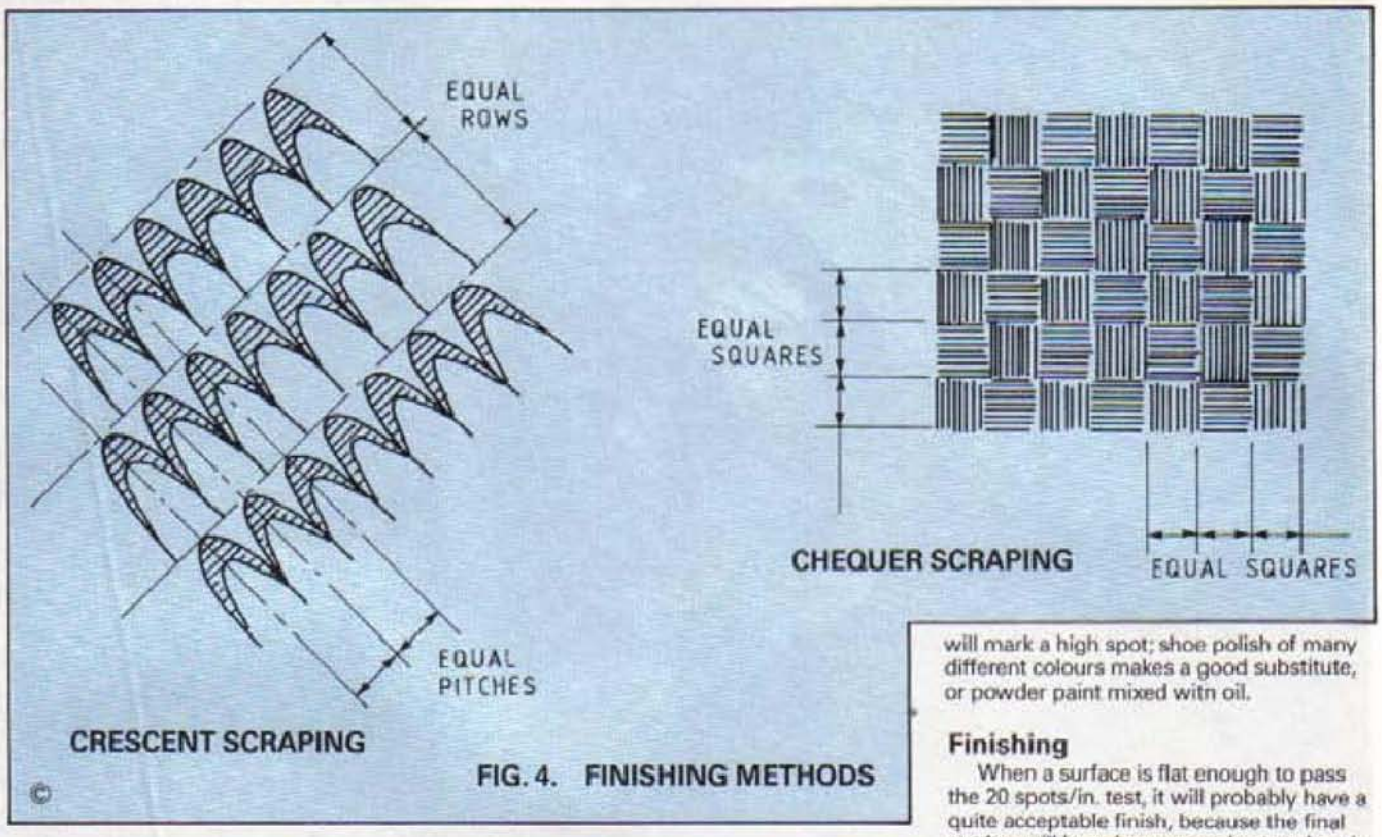

FIG. 4. FINISHING METHODS

The flat scraper shown in action.

from other tools, there is little point in putting a superb edge on them and then having them rattle about in a drawer full of files.

Using the flat scraper

The scraper is held at an angle of about 20 deg. and gripped as in **Figure 3**. It is one of the few tools which cuts with a negative rake, so it is impossible to dig in. The centre of the radius does the cutting and the metal is removed in very small amounts with short strokes. Like most hand processes, it takes time to learn and the only way is to keep at it and be patient.

Some sort of master surface is needed for a refence, ideally a surface plate. If there is no surface plate a piece of plate glass is a good substitute, or the table of a milling machine, providing that it is flat and in good condition.

The master surface is smeared lightly with engineer's blue or a suitable substitute, the surface to be scraped is rubbed lightly on the master and the high spots will show up. They are scraped off, then the process is repeated. For the first few rubbings, the spots are more likely to be patches, if they persist in being patches, try filing them because the scraper takes off so little that it will take ages if there is a bump of a thousandth of an inch or so. Eventually, the spots will get smaller and closer together. When any marked square inch has 20 or more spots in it, you have won and can start getting the circulation back into the fingers.

It is easy to write, not so easy to do, so remember the important things. Keep the scraper sharp, cut with the middle of the radius, start at the furthest part and scrape towards the nearest so that shavings don't get trapped under the scraper, and be prepared to spend a long time getting it right. It helps if the first piece of scraping isn't too big; two or three square inches is big enough and it should be cast-iron or brittle brass. Remember too, that engineer's blue isn't the only stuff which will mark a high spot; shoe polish of many different colours makes a good substitute, or powder paint mixed witn oil.

Finishing

When a surface is flat enough to pass the 20 spots/in. test, it will probably have a quite acceptable finish, because the final strokes will have been very short and each time the surface is blued the scraping direction will be changed 90 degrees. It will, however, look even better if it is feathered or chequered.

Feathering is done by using one corner of the cutting edge of the scraper as a pivot and wobbling the scraper forwards over the work so that the radial cutting edge makes a crescent shaped mark. It gives the scraper a swooping motion like the flight of a small bird. If the movement is diagonally across the work, the crescents nice and small, the rows close and crossed by a second set at 90 degrees to the first, it looks very hand-finisned. The trick is to make sure that the crescents are regular and that the corners of the scraper don't dig in. So that the marks will show up nicely and you can see what you are doing, a smear of blue, or whatever substitute you are using, will do the job. As I mentioned previously, I can no longer feather at will and need a bit of practice first, but I can do the next best thing, which is chequering.

As the name suggests, chequering makes a chessboard pattern. It is done by marking out a grid of equal-sized squares with a very soft pencil and scraping every other square, then filling in the others by scraping them at 90 degrees to the first set. **Figure 4** shows both feathering and chequering methods of finishing. Chequering isn't quite the inferior one of the two, as I may have suggested. In fact, if it is done accurately, it is very easy on the eye and when the light catches it at certain angles, there is a 'now you see it, now you don't' effect.

Modern machine tools often have a surface or two with a scraped pattern on them, but looked at closely, the cutter or grinder marks can be seen underneath. It is, though, a useful thing to be able to do, and should you invest in your own surface plate, it would be nice to be able to say, 'yes, genuinely hand finished, by yours truly'.

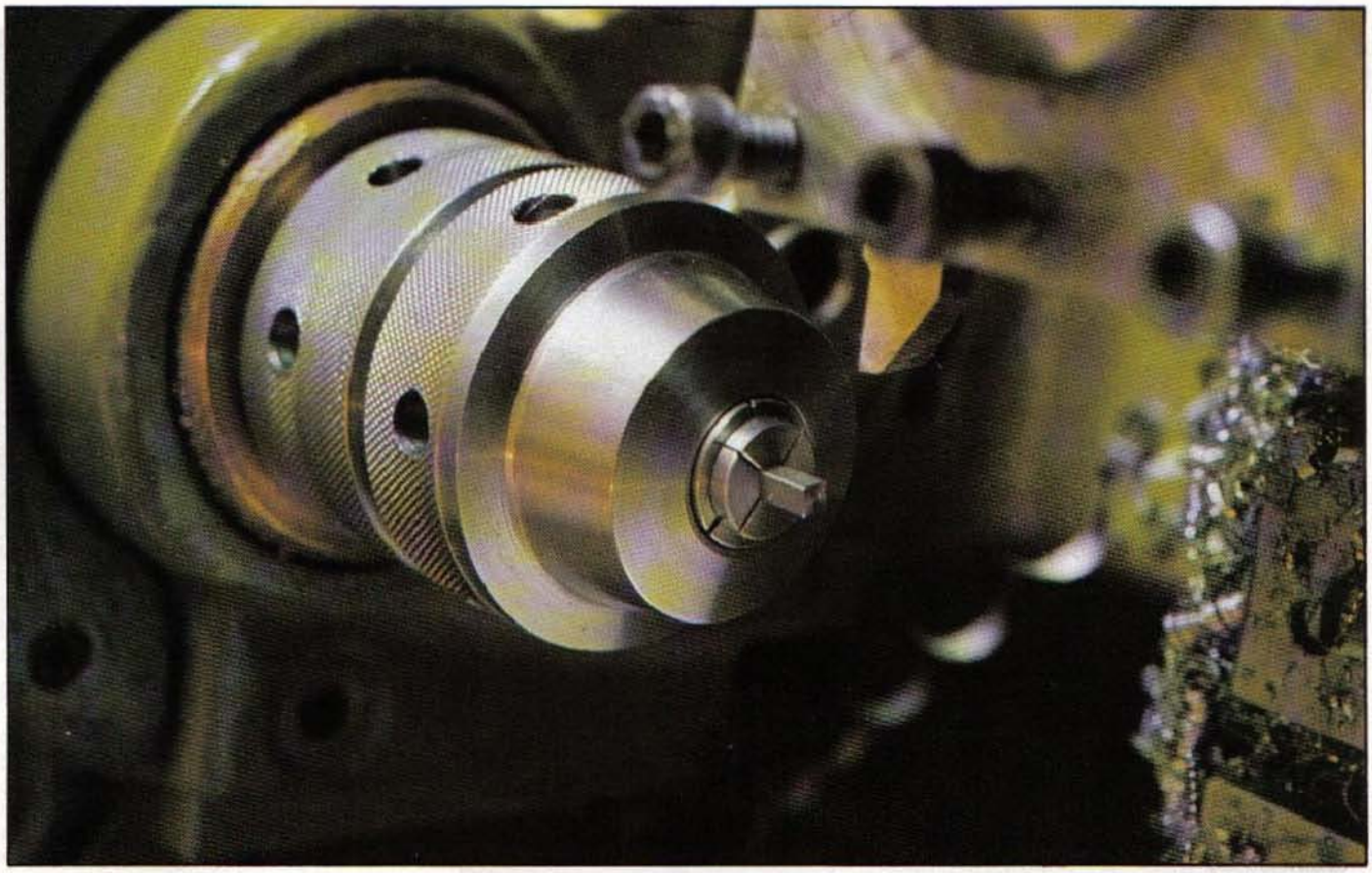

COLLETS FOR MATERIAL

The trick is to fabricate four completely separate jaws like those on the left of this illustration. On the right, the jaws mounted in the chuck with a short length of square stock securely gripped.

Turning square material is a problem. Here H. K. Hall describes a way of doing so and ensuring quick, accurate setting of the material

Requiring to make some 200 small square nuts in steel in three sizes, the smallest of which to be $\frac{1}{16}$ in. square, I soon realised that the biggest problem was to be one of holding the material in the lathe. Whilst it would be possible to use my 6 in. four-jaw chuck, it would be totally impracticable, not least from the safety aspect, for such a large chuck to be used for such small components and requiring high speeds (2000 rpm plus) to machine.

The sensible and safe solution would be to make suitable collets for my collet chuck, but making a collet, even for round material, is time consuming. I was also concerned about having to make a broach to create the square and that, at the end, it may not run true and the time would be wasted since the collets were not expected to be used again. An easier answer had to be sought. Slightly simpler would have been to make a collet with a parallel outside to be used in a normal round collet. However, this would still require a broach to create the square and again may not run true.

Separate jaws

It was with this idea in mind that I realised making the collet with four totally separate jaws would eliminate the problem

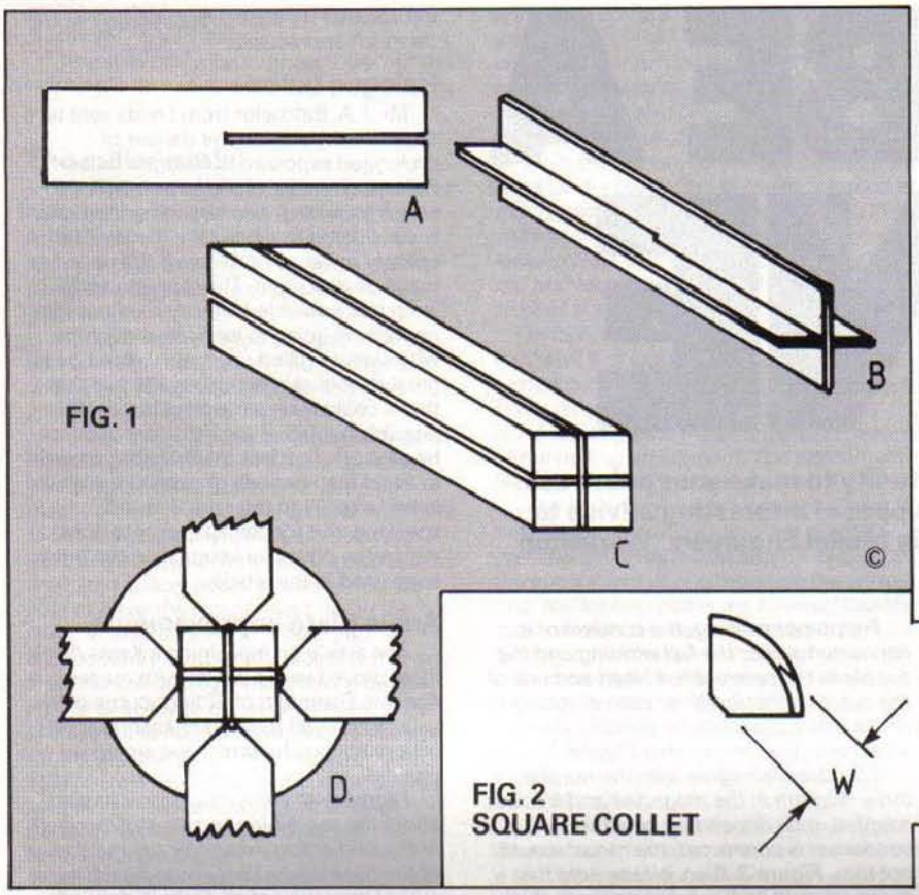

FIG. 1

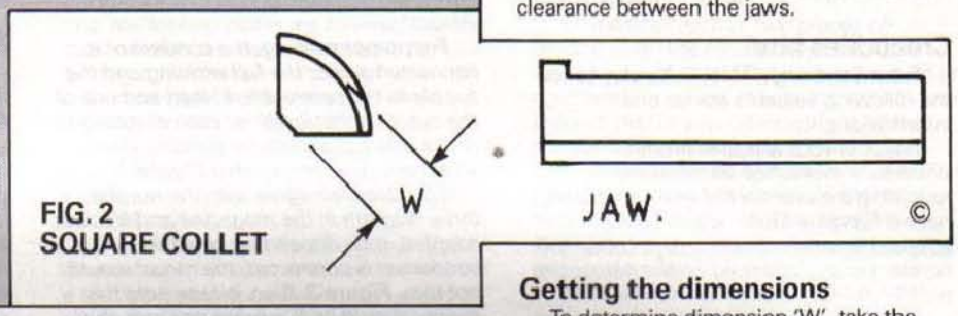

FIG. 2
SQUARE COLLET

SQUARE

of broaching and concentricity. I have now made a number of jaw sets like this which have proved totally satisfactory in use and are very easy to make as follows.

The dimensions will depend on the size of round collet to be used. In my case a $\frac{7}{16}$ in. diameter collet, as this would enable the jaws to be made from $\frac{1}{4}$ in. square bright mild steel.

First cut four pieces of $\frac{1}{4}$ in. square bright mild steel 2 in. long and two pieces of card 2 in. $\times \frac{1}{2}$ in. These are slotted as in **Figure 1** and placed together as **Figure 1B**. The four pieces of bright mild steel can be added to form a pack as **Figure 1C**. This is then placed in the four-jaw chuck holding across the joins as shown in **Figure 1D** with about $1\frac{1}{4}$ in. projecting and then adjusted to run reasonably true. The pack is turned until a full circle is achieved. This diameter is not critical, as it only forms a head to the four jaws which prevent them passing through the round collet when being used.

Fitting square to round

Now, over a length of $\frac{7}{8}$ in., turn to 0.437 in. diameter accurately to suit the $\frac{7}{16}$ in. round collet. Finally, to complete this stage, part off to give a $\frac{1}{8}$ in. wide head.

We now have four pieces, each of which requires to have a flat added to it. This can be milled, but I have found that filing with care is quite adequate. It would be easy to fall into the trap of considering for, say, a $\frac{1}{8}$ in. square, that all that is required is to file $\frac{1}{16}$ in. off, but this would not take into account the card which was added to allow clearance between the jaws.

Getting the dimensions

To determine dimension 'W', take the outer diameter turned to fit the collet, in this case, 0.437 in., and subtract from this the across flats dimension of the square required for, say, $\frac{1}{8}$ in. materials. This is 0.125 which gives 0.312 in. This result is divided by two to give 0.156 in., this being dimension 'W' as shown in **Figure 2**.

By carefully holding each jaw individually in a vice on its ends, the flat can be filed and the jaw measured at points along its length with a micrometer without requiring to remove the part from the vice. When done with care, this should produce an adequate result. The four pieces can now be inserted in the collet, together with a short length of the square material. Ensure all four pieces are touching the collet face and tighten; the front of the four-jaws can be turned to give a smooth face.

It has occurred to me whilst writing this, that this arrangement could equally be used for holding rectangular material or for the jaws to be made to different dimensions, deliberately creating an eccentric collet which could be used either for square or round materials.

These are very easy to make, taking some 10-15 minutes for one set and have proved an excellent and easy answer to what appeared at first a very difficult problem.

You'll require a complete set of jaws for different thicknesses of stock; however, they're fairly quick and enjoyable to make and offer a neat solution to a common problem.

QUICK TIP

Storage space in the workshop is always something of a problem. Additional space can be gained for the storage of nuts and bolts, etc., by screwing the lids of jam jars, coffee jars and the like under a shelf and then putting the materials in the jars and screwing them back to the lids. Remember to use two screws per lid, or they will rotate with the jar when you are trying to undo them to get at the contents.

SCRIBE A LINE

Your views, your pages! Your opportunity to make your point, ask the question or simply pass on a snippet of interesting advice to others. Your letters for publication in Model Engineers' Workshop are always welcome

Crocodiles bite!

From Edinburgh, Mr P. C. Barclay sends the following valuable advice and information:

I refer to your article in Model Engineers' Workshop winter issue regarding a motor for the power hacksaw. I have a Parvalux Motor which I have adapted to drive a Super Adept Lathe; the condenser size stamped on the nameplate is 2UF.

However, I would request your forebearance if I point out some shortcomings in your article relating to the testing and running of this motor. My qualifications are forty-six years in the electrical industry; ten years in manufacture, and thirty-six as a distribution and maintenance engineer with Scottish Power, where safety and the use of proper test instruments were key factors. Your method of testing with crocodile clips would be instantly banned for apparent reasons. The human factor always arises, and crocodile clips are notorious for jumping free. One mistake can be fatal, even at a house voltage of two hundred and forty volts.

What I would suggest for testing and as a permanent solution in the workshop is a test block, a multimeter and an insulation tester (Megger). The test block can be obtained from Radio Spares or a good electrical or radio components shop. No live ends are exposed and connections from the motor are connected to fixed insulated clips. The approximate cost is ten pounds.

There are three leads on my motor, two white and one black. A test with the multimeter L30-L30ohms with the black lead centre tapped on the winding.

For proper running, the condenser is connected across the full winding and the supply to the centre (black) lead and one of the outer (white) leads for correct rotations; check which outer lead is suitable. See schematic diagram number ***Figure 1.***

This does not agree with the number three diagram in the magazine and if this is adapted, then depending how the condenser is connected, the motor would not turn, ***Figure 2****. Also, please note the supply should be live or neutral, not plus and minus which applies to direct current. The plus and minus could easily mislead someone into purchasing and acquiring a condenser for use only on direct current, which would blow up if connected to a.c.*

Lathe help

Mr Kirkland of Victoria, Australia has written to us requesting the assistance of readers about a lathe he owns. If possible we will deal with replies through this column, if not they will be passed on to him.

Having just acquired my first metal turning lathe, Model Engineers' Workshop was exactly the type of magazine I was looking for. The lathe is somewhat larger than the usual model maker's lathe being six feet between centres, but as the price was right I could not refuse it on those grounds.

Apart from writing to congratulate you on an excellent magazine, I am also wondering if any of your readers could assist with information on my lathe, which is made by Woodhead Scriven of Holdsworth, Leeds. This is the only marking I can find on the lathe, so I have no idea how old it is, or the model number, etc. As far as I can tell, it is complete but any information regarding its operation would be much appreciated.

Halogen bulbs

Mr J. A. Batchelor from Leeds sent us a copy of an article on the danger of prolonged exposure to Halogen bulbs. Following receipt of the letter, some enquiries were made regarding their use. It is considered that basically they will be unlikely to cause problems if the units are made as described. The more powerful lamp has a shielded filter, and unless the operator is going to work on a machine with sleeves rolled up, there will not be a great deal of skin exposure. We feel that this is unlikely on a machine but could possibly happen if the lights are used for benchwork. Readers are therefore advised to avoid long periods of exposure with the lamps directly to the skin. Generally speaking, the problems appear to arise with more powerful lamps than the ones suggested in the article...

Angle plate improvements

The article on machining a Keats Angle Plate proved very popular with readers. Ascanio Giannuzzi of Sittingbourne offers us an improved method of ensuring the base is square, for which we are very grateful.

I agree with everything that was said about the machining sequence described in the said article except for the machining of the base which I believe to be the most critical operation of all. From it, depends the squareness of the clamping faces in relation to the faceplate of the lathe.

Surely the best and absolutely certain method to ensure this, is to chuck a piece of, say, one inch diameter M.S. in a four-jaw chuck, protruding about one and a half inches. Skim the O.D. to have it absolutely running true and then clamp the Keats angle plate to it, base outwards.

Using correct speed, face the base. This should ensure certain squareness of the V-shaped face of the large casting.

May I take this opportunity to say how much I like the magazine with its variety of articles on workshops. I have just taken out a subscription and look forward to the next issues.

No mistake!

Mr T. V. Lavarack DFH C.Eng. MIEE on the subject of electricity in the workshop:

I note from the first three issues of this excellent magazine that there are several articles which embrace the use of 'electrics' which, of course, is very pertinent today.

May I, however, for the benefit of your readers, tender a piece of advice repeatedly given to us by the workshop superintendant when studying for our degree: "Always remember, gentlemen, that

FIG. 1 CAPACITOR START & RUN

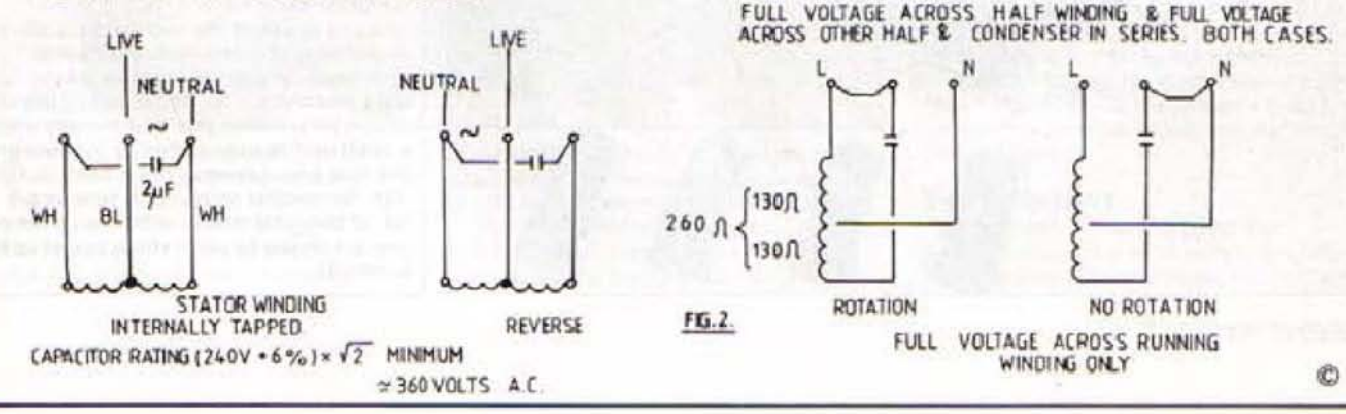

whereas you can make a mistake, electricity NEVER does".

That was half a century ago now but the warning is just as relevant today.

The miller's tale!

Mr Anderson of Bournemouth tells us of his experiments with the Amolco Milling Attachment:

I'm very grateful to your contributor Mr K. Spreadborough for solving a major dilemma for me!

At the time I received the first copy of your excellent magazine, I was trying to decide which vertical milling machine I should buy. Foremost amongst my considerations was limited availability of workshop space and, of course, quality. I was already well aware of the Amolco machine and its suitability as an attachment to lathes like the Myford but I've always regarded such attachments as a waste of time (and space) because unless you are able to leave the machine set up on the lathe, it takes so long to mount and subsequently remove the machine that you find yourself asking if there isn't a quicker way to get the job done. Then there is the problem of convenient and secure storage for the attachment. Furthermore, milling attachments are heavy and cumbersome so that the risks of causing material or personal damage during handling operations are high.

Mr Spreadborough's solution to these problems is, in my view, an ideal one. I was so impressed by his article that my views have changed and I have abandoned altogether any idea of ever owning an independent milling machine and I've now bought an Amolco milling attachment.

I don't have a Myford cabinet and so my lathe is mounted on a purpose-made wooden bench. Since it would have been difficult to attach Mr Spreadborough's cabinet-mounted stand to my bench, I elected to mount my storage stand on the wall behind the lathe, using strong shelf brackets. I haven't yet identified any problems introduced by this arrangement. It allows considerable flexibility in the positioning of the lathe bench along the wall, should future changes in workshop furnishings require.

I used proprietary one inch square aluminium tube and fittings for the storage frame itself which gives a very rigid structure without any welding. It is more costly, though. For the junctions between the storage brackets and the bridge piece, I used pieces of ¾ in. square tube projecting about one inch from inside the aluminium tubes of the storage frame. (On reflection, I think it would be neater had I done this the other way round, ie put the ¾ in. square junction pieces in the bridge piece rather than in the storage frame – well, what are mistakes for if they're not to be made?)

I must say, the storage and handling system works so well that complete mounting and demounting operations take only about two minutes.

Like Mr Spreadborough, I found the clamping plates provided by Amolco far too fiddly to contend with, so much so that initially I was spending more time wrestling with the plates than moving the milling machine from and to its storage bracket. After much deliberation, I came to the conclusion that Myford already has the answer. I abandoned the Amolco plates (they now come in handy for clamping work to the cross slide) and replaced them with plates of similar thickness but profiled in the same way as that for the Myford fixed steady. I also bevelled the long underside edges of my plates so that they guide themselves into the gap between the ways of the lathe. One of these is locked to the threaded rod which goes through the column of the attachment so that here the locking plate is positioned by rotating the rod and locking is achieved by tightening the nut at the top of the rod.

To remove the milling attachment from the lathe, the locking plates are loosened, turned anti-clockwise to align with the slot in the lathe bed, then raised and drawn hand-tight against the underside of the foot of the milling attachment. The attachment is then ready for storage.

The locking plates are left in place on the attachment so that they are ready for the next installation operation. Then, once the attachment is in position on the lathe bed, the locking plates are lowered into the gap between the ways of the lathe by turning the threaded rod through the column and the socket head cap screw anti-clockwise, then turned and locked in place by rotating clockwise. Correct positioning of the locking plates for both locking and removal is easily verified either by sight or feel.

One of these days in my copious spare time (of which I have none) I propose to cut a shallow bevel along the bottom edges of the foot of my Amolco milling attachment to prevent it catching on the inner edges of the lathe bed. This will allow for the positioning of the milling attachment over the lathe bed during installation to be less precise.

I cannot understand why Amolco don't supply the foot already bevelled in the way I propose. What it must be like trying to install the attachment on the lathe every time by hand without any form of guidance doesn't bear thinking about. While I am well pleased with my Amolco machine, there are constructive criticisms I could make but this is not the place.

Hose it done?

An interesting point raised by Mr S. J. Price from East Finchley. Can a reader please put him out of his misery?

Your fascinating article about 'Flea Power' in the 1990 winter edition of M.E.Workshop caused me to ponder on the interesting phenomenon which your more learned readers may be able to explain.

If we turn on the garden hose (ban permitting) it will act like a demented snake owing to the back pressure, but if we put the hose into a watering can the back pressure decreases dramatically, which is surprising because one would expect the resistance of water to be greater than the resistance of air.

I await with interest any replies from the 'boffins'.

Hero revisited

Reader Don Macmillan recalls childhood days and fun on the cheap with the Hero's turbine principle and an empty spice tin!

As a schoolboy, circa 1938, I made a model based on the principle of Hero's turbine. Its performance was much better than that reported for the very expensive apparatus described in the winter edition of Model Engineers' Workshop. The idea probably came from one of the excellent publications of the period, such as 'The Boy's Own Paper'. The design was so simple and effective that it may be of interest to your readers.

Spices were then sold at grocery shops in beautifully made tinplate containers. The near airtight seal necessary to preserve the contents was obtained by the fit of the plain cap alone. One of these was utilised for the model.

A dimple was formed in the centre of the lid and of the bottom with a blunt centre punch. Two holes were pierced on a diameter just below the edge of the lid. A round file was used to cut a transverse groove across the middle of a length of ⅛ in. copper tubing to admit steam to the bore. The tube was centred through the holes and soldered in place. Smooth, tapered jets were formed by compressing the ends of the tube around the point of a large sewing needle. The tube was then bent till the jets were correctly aligned.

One end of each of two pieces of fencing wire was filed to a conical form having a blunt point. The ends were bent at right angles and the shanks forced into two holes drilled in a wooden upright so that the points were vertically opposed. The upright was secured to a wooden base. The previous assembly was fitted between the wire points, which rested in the dimples. When the spring of the wires was suitably adjusted it rotated freely.

With an inch of water in the container and a spirit lamp underneath, action was soon forthcoming. As rotation commenced, it appeared to gain vigour, probably due to the water being driven up the hot tin sides by centrifugal force. The flame also appeared to be drawn up by the rotation. I don't know what rpm was achieved, but the radial arms became a blur within a halo of vapour. It was a gratifyingly dynamic proof that Hero was definitely onto something!

This was observed from a prudent distance. Since the cap was retained only by friction and the spring of the wire I hoped it would pop if the pressure became excessive. I thought of making a vent to be uncovered by the rising cap, but the need did not arise.

I intended to recreate the turbine for an action photograph. Unfortunately, the metal spice containers, like the wooden cotton reels from which we made our toy tractors, seem no longer available, and other projects are pressing. It was, however, great fun at the time!

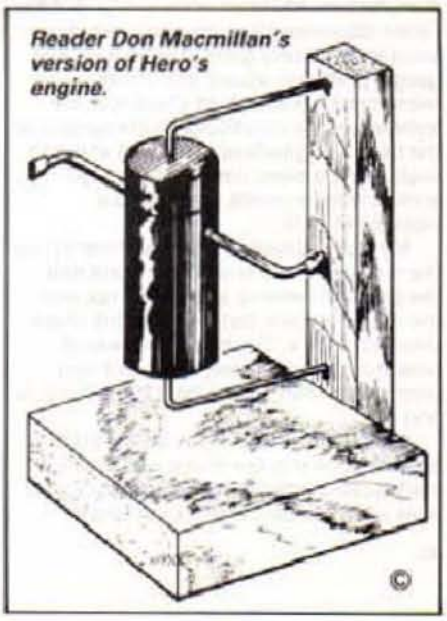

Reader Don Macmillan's version of Hero's engine.

Having acquired a vertical milling machine the problem is invariably how to hold the milling cutter securely. Collet chucks cost a small fortune but Harold Hall has solved the problem with a homemade collet holder that can be adapted to individual needs. It is made from stock materials

Completed chuck and collet set for use with ¼ in. shank cutters; a non-slotted version for this size using a grub screw for fixing the cutter would be useful.

MILLING CUTTER C

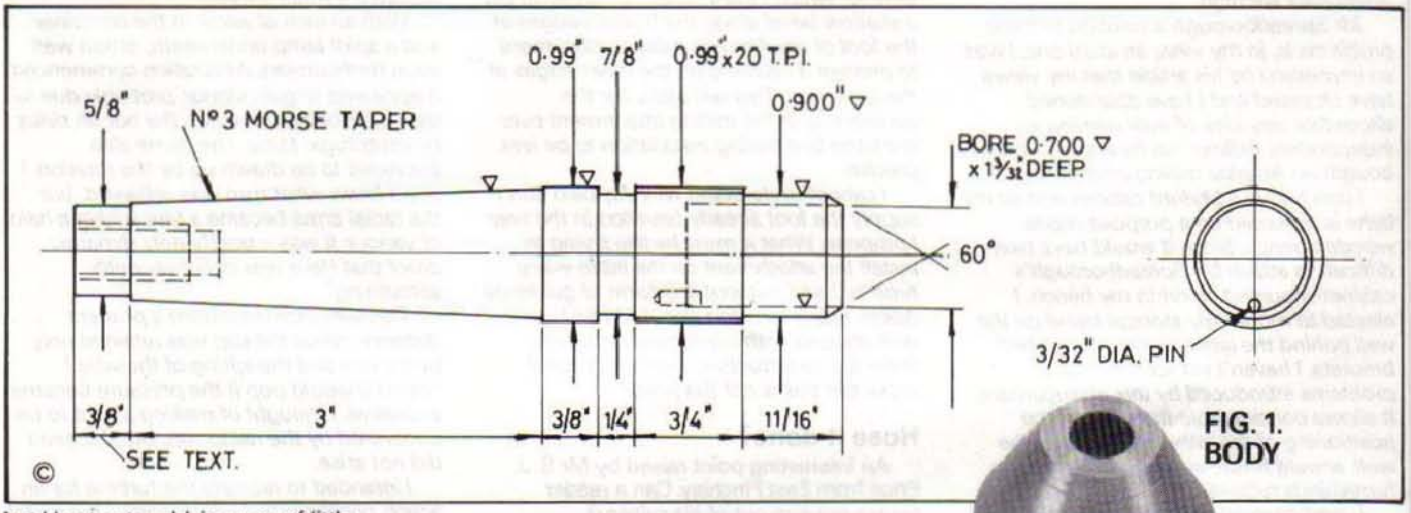

FIG. 1. BODY

Having purchased one of the many makes of drill/mill now available, I soon learned it had one major weakness. My first observations were of a very robust machine, but in view of its considerable weight, some dismantling was necessary to assist in moving the machine into its final position. This highlighted some standards of manufacture not up to those we would normally expect, but I hasten to add, in areas of little importance.

With the machine now in its final location, my first consideration was to check its accuracy, particularly in view of my findings regarding standard of manufacture. My fears were unfounded for I soon discovered that the standard of accuracy was very good. Armed with dial gauge, precision square and inside micrometer, I was able to check that the spindle was perpendicular to the surface of the table. Longitudinal travel was at right angles to the cross travel and the lead screws were accurate, even up to a distance of 10 in.

My fears allayed, it was now time to use the machine and it was at this point that the problem became apparent – not with the machine itself, but with the drill chuck provided with it. The drill chuck was of poor quality, inaccurate, and had a very rough feel when tightening it on to a drill or end mill.

It soon became obvious after a number of spoilt jobs that the chuck was totally inadequate for the purpose of holding end mills which tended to work out under

The three main components; note the short parallel portion at the left hand end of the morse taper, used to support the part in the fixed steady whilst the bore is machined.

action of the spiral flutes, there being no end-on pressure as when using a twist drill. Since a better quality drill chuck would still probably have this problem, I decided that a proper end mill chuck would have to be obtained.

I was soon to learn that the cost of a suitable chuck was going to be very high, some 15% of the cost of the machine itself! This seemed out of all proportion and, as a result, my thoughts turned to making one myself.

Materials used

It was, of course, not going to be possible to produce hardened parts, as these would no doubt distort during the process and I had no cylindrical grinding facilities available to take out these errors. The parts would therefore be made from mild steel, but as they would not be in constant use, should be adequate, a fact that has now been fully proven.

The chuck is designed to take the type of end mill with the threaded shank. This thread enters into the thread in the rear of

CHUCK

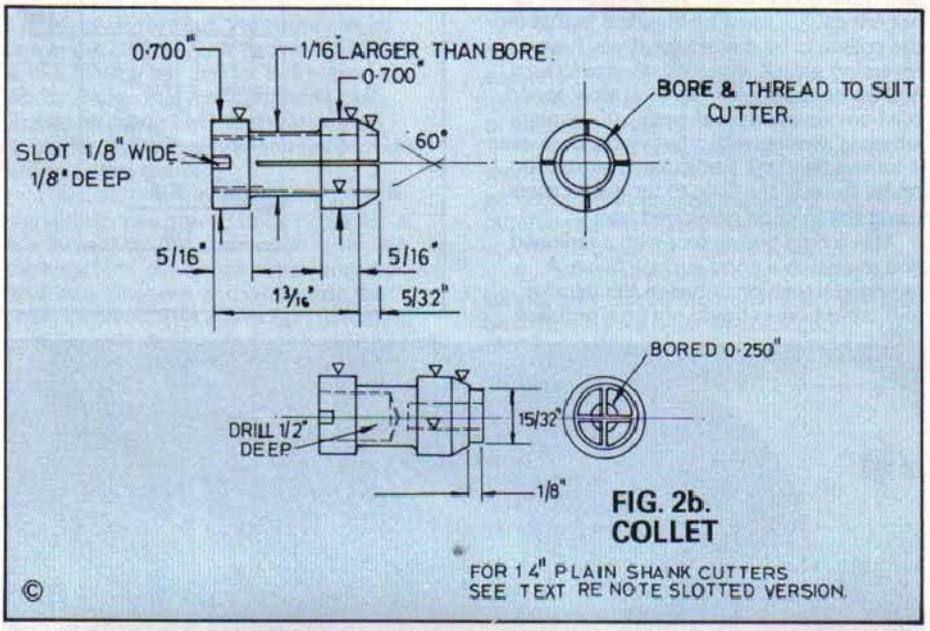

A collet shown with a typical cutter; note the thread in the rear end of the collet and the anti-turn slot. Close-up of chuck internals at left.

the collet and, as the rear of the shank contacts with the bottom of the bore in the body, any tendency for the cutter to rotate will force the collet forward into its mating front taper in the outer ring, thus holding the cutter firmer, but without altering its position, due to it being always in contact with the bottom of the bore in the body.

In practice, the unit has functioned far better than I could have foreseen. It requires for the outer ring only to be lightly tightened with the cutter partially threaded into the collet and for the cutter to be turned until it just contacts the base of the bore in the body. After use, it can still be undone with ease.

The drawings show the individual parts. The dimensions indicated can be changed to suit material available or other reasons, such as size of taper, providing the essential features of the design are maintained.

During manufacture, it is also necessary to ensure certain conditions are met, most important of these being the concentricity of important faces on a given part. These should, as far as possible, be machined without removing the part from the lathe and are indicated with a closed triangle on the drawings. Where a close fit between certain parts is required, this is marked with an open triangle on the drawings. The angle on the front face of the collet and the inside of the outer ring should also be the same.

The angle on the body is not critical, as there is clearance between this and the outer ring to ensure the ring tightens only onto the collet.

Manufacturing procedure

First, chuck the material for the body and support the outer end in a fixed steady. Drill the end and tap to suit milling machine draw bar. Then turn the parallel portion; but this can beneficially be longer than indicated on drawing at this stage, as it is to be used for chucking when the part is reversed in the lathe.

Remove the part and, still using the fixed steady, reverse it and hold on the turned portion. Centre drill on end and remove steady and support with centre.

The body should now be rough turned at say, 0.030 in. oversize on all its outer diameters and the morse taper turned, using the top slide. Even if a test taper has been turned first, it will still be preferable to remove and test with its mating taper. It will be essential to take one final fine cut on taper to ensure concentricity when returning to the chuck.

Next, produce the threaded portion and also the plain portion between this and the taper, the purpose of which is for supporting with the fixed steady when the tailstock centre is removed to machine the remaining surfaces, including the bore.

To ensure a good surface finish, make sure all tools are very sharp and that round nose tools are used, though a tool with a much smaller radius will be necessary to finish the bottom of the bore where the collet seats.

If the parallel portion at the small end of the taper has been made longer, carefully cut off with a hacksaw, holding the waste portion in the vice and finish with a file. Finally, fit the pin in the base of the bore – the purpose of this is to prevent the rotation of the collet.

Next comes the outer ring, but first produce a gauge exactly the same diameter as the outer end of the body and deep enough to go the full depth of the mating bore in the outer ring. Place the material for the outer ring in the chuck and drill through at ½ in. diameter. Then bore to the core diameter of thread to ¾ in. deep and counterbore as indicated, to assist in cutting the thread.

Now bore very carefully to be a close fit

on the gauge, already made for this purpose, to the depth indicated. Also bore the remainder to the diameter at the outer end of the ring.

Making the mating taper

Now the taper to mate with the collet end must be turned. The precise angle is not critical but must be identical to that on the collets to be made later. If you have a reversing switch, you may choose to turn one of the tapers in reverse at slow speed, but I am always apprehensive of running lathes in reverse with a heavy chuck in case it screws itself off, particularly on start up. I prefer to reset the slide to produce collets, using the method described later.

Use a rigid boring tool with a radiused end to ensure a good surface finish. A radiused transition between the parallel and taper bores should not be a problem, as there is clearance at this point between the body and the outer ring.

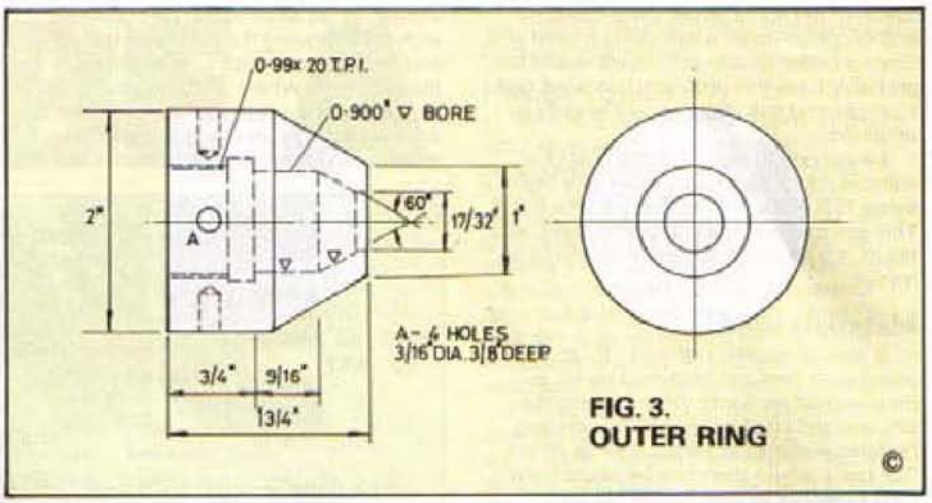

FIG. 3. OUTER RING

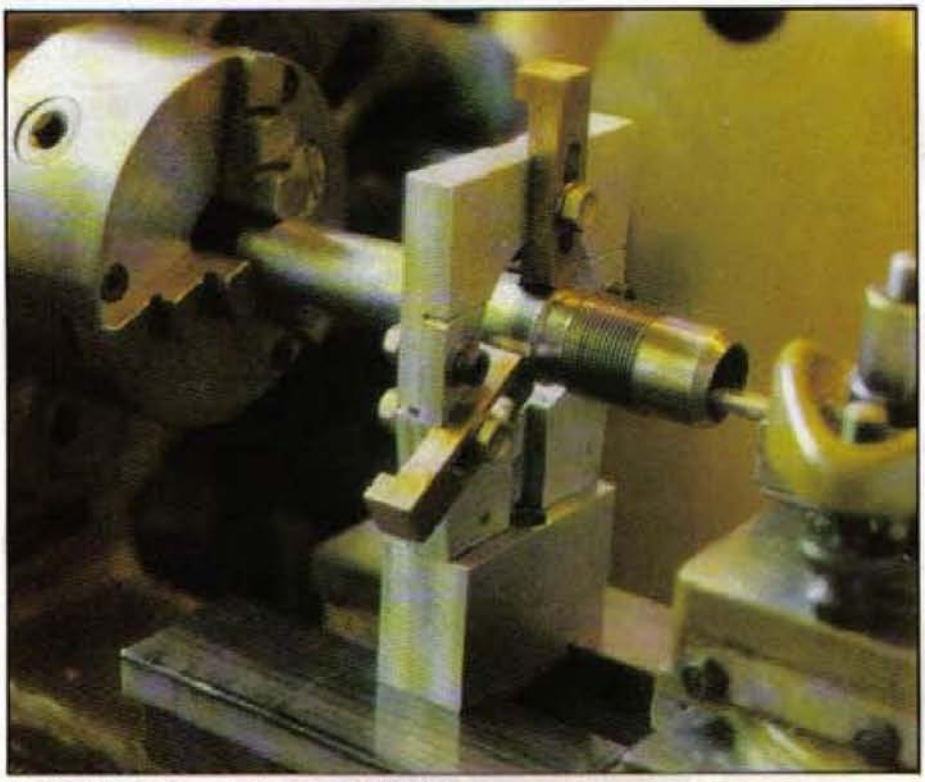

Boring the body; note the use of a fixed steady, described elsewhere in this issue.

This leaves the thread which can now be produced to fit the body, but before finalising the outer ring, proceed with the collets.

Making the collets

Place a suitable length of material in the chuck and first produce the threaded end of the collet. As absolute concenricity will be difficult to achieve (even if a four-jaw chuck is used), the thread should be made a very free fit to ensure that the collet seats accurately on the shank of the cutter and is not pulled off centre by the threaded portion. The outer diameter and reduced diameter section should be turned to about 0.010 in. above size and parted off to a little over collet length. If more than one collet is to be produced, it would be preferable to produce them all to this stage first.

Now, place a short length of $\frac{7}{8}$ in. material into the chuck and, having set the top slide to turn the taper on the collet, make a trial taper and check this against the outer ring using marking blue and making adjustments until a satisfactory result is achieved.

Now place the collet back into the chuck, but reversed to that when producing the thread, ensuring it is running as true as is possible to minimise the error in concentricity between thread and bore. Turn the bore to a very close fit on the shank of the cutter and deep enough to ensure the threaded end of cutter will project out at least $\frac{1}{16}$ in. Also at this stage, turn the taper.

The outside of the collet remains to be turned and, to achieve concentricity, will require turning on a mandrel made to suit, but first complete all collets to the bored stage, whilst the top slide is set to the required taper. Set the top slide to $\frac{1}{4}$ deg. to $\frac{1}{2}$ deg. in the direction which produces a larger diameter nearest the chuck.

Now place a short length of material into the chuck and turn parallel, using the saddle, to be a very close fit to the collet bore for about $\frac{1}{4}$ in. of its depth. Then, with the top slide, turn with an expanding taper. Gently push the collet onto the mandrel and turn the outer diameters (using light cuts only to avoid it slipping) to be a close fit in the body.

The outer ring can be finished, using the same top slide setting used for the collet to

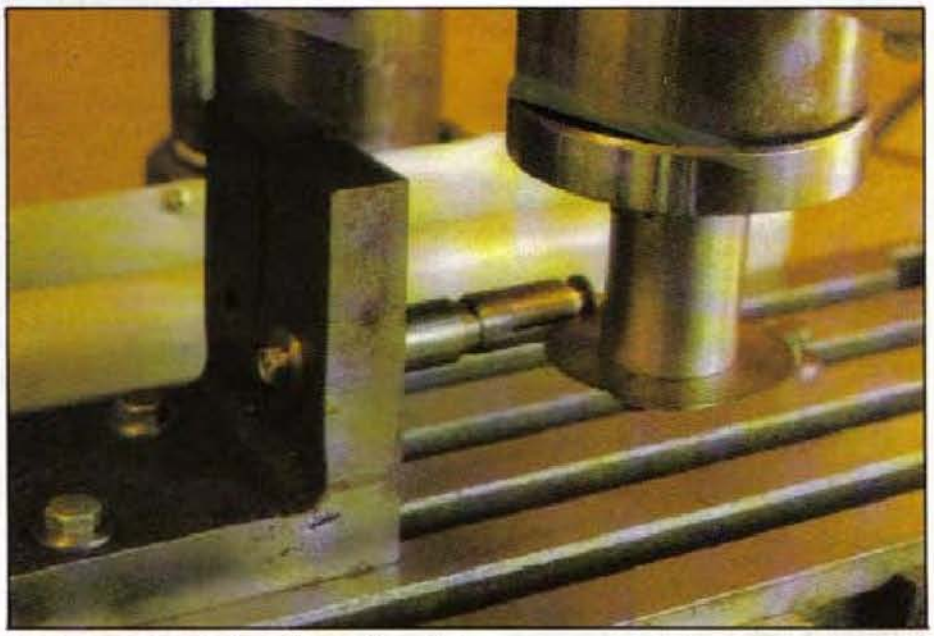

Cutting the slots in the collets with a slitting saw.

Finished tool in use on the milling machine.

turn the outer taper and, if you wish to improve the outer diameter from that of the stock material, a mandrel can be produced to fit the inner bore and a light cut taken to improve appearance.

There are now only a few tasks left to complete the chuck, these being: (1) To slot the collets – a hacksaw can be used, but preferably if available, a slitting saw will make a better job. (2) Add a pin to the base of the bore in the body and a mating slot in each collet, to provide an anti-turn feature. (3) Drill four holes in the outer ring for use with a tommy bar. This will not normally be required with threaded shank cutters, but is essential on plain shanks.

For the smaller size cutters, with $\frac{1}{4}$ in. diameter shafts and without a thread, a collet as per **Figure 2b** can be produced. Note that the 0.250 in. hole does not run into the larger hole, but is left with a bottom so as to act as a stop to the short shank on these cutters.

In the light of experience, I find that when using the larger sizes of cutters ($\frac{3}{16}$ in., $\frac{7}{32}$ in. and $\frac{1}{4}$ in.) in this collet and taking a relatively heavy cut, the cutter can be drawn out of the chuck even if tightened with a tommy bar and for this reason I would advise that a non-slotted collet should be made but fitted with a grub screw for tightening onto the flat provided on the cutter shank.

The unit, now having been in use for some time, has proven to be far better in use (except for my reservation regarding the larger $\frac{1}{4}$ in. dia. shank cutter) than I could have ever foreseen and well worth the effort involved. The use of non-hardened parts is perfectly satisfactory, but do ensure that the unit is kept clean when collets are changed. With the collet being above the cutter, the problem of entry of swarf is far less than in the case of collets used in a lathe where I have also used non-hardened collets satisfactorily.

Use a fixed steady

The requirement for a fixed steady indicated in the manufacturing procedure is essential, both to the safety of the machining operation and the concentricity of the finished part.

If the steady is not available, it may be worth considerng making one before proceding with this milling chuck, otherwise a temporary one can be constructed just for this purpose.

If a temporary steady is to be used, it cannot be stressed too much that this must be extremely rigid for safe operation. **Figure 4** suggests a suitable method.

Tommy bar hole seen here is rarely used as the unit needs to be finger-tight only when used with threaded end cutters.

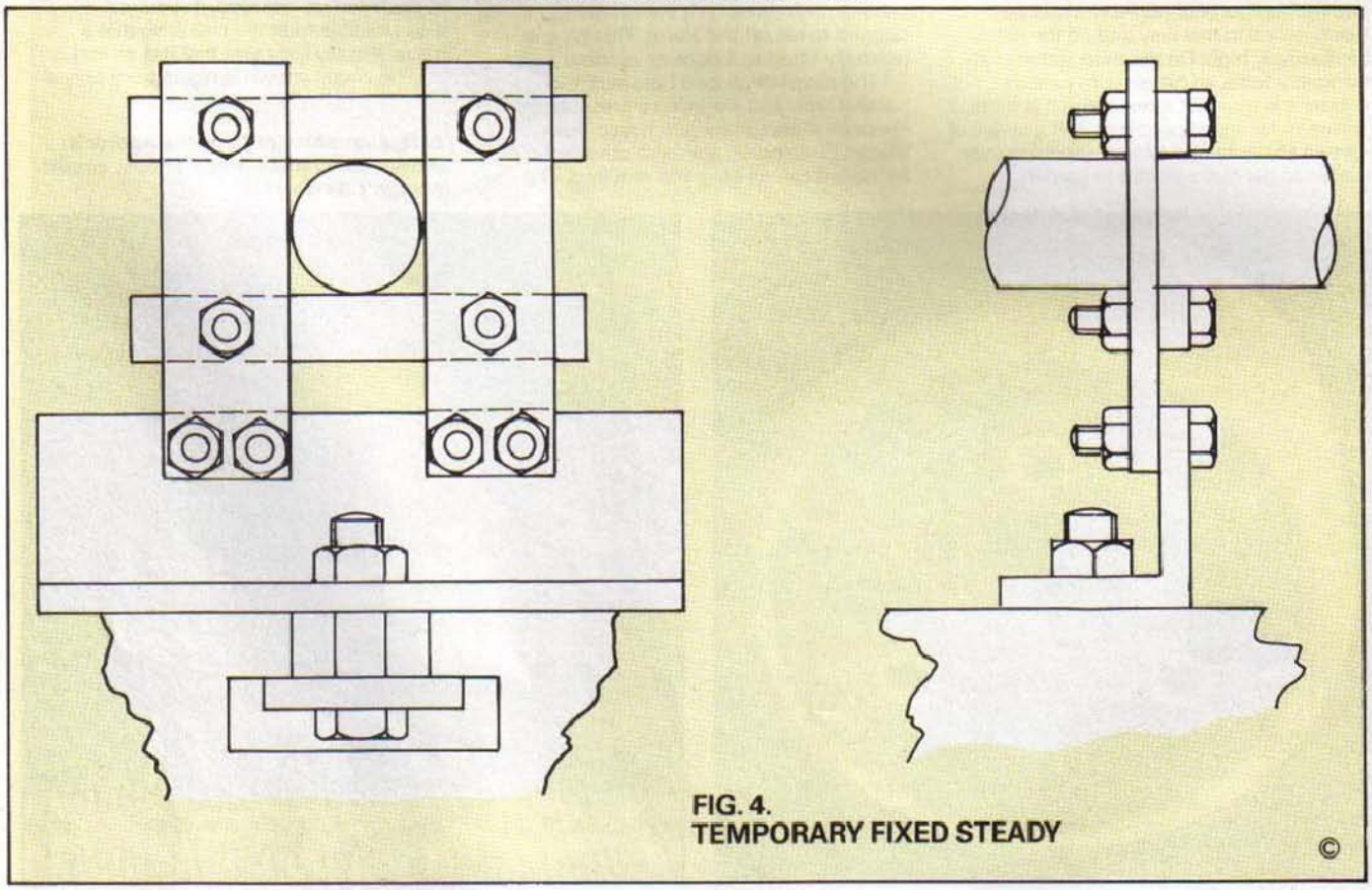

FIG. 4.
TEMPORARY FIXED STEADY

STOP THIEF!

More and more thefts of tools and models from home workshops are being reported. Whilst secure premises are essential, some form of scare alarm such as this one described by 'Bluey' will make sure that any would-be intruder is not going to stay around to take your equipment. The circuit involved is so simple that even a model engineer without knowledge of electronics can wire it up

Statistics produced recently have shown that garden sheds now have a fifty percent greater chance of being broken into than was the case a year ago. Why this increase we may wonder? More people now possess high-value garden machinery as well as do-it-yourself equipment; and with the humble drill now costing in the region of some forty pounds or so, the thief can find a ready market at knock down prices. The garden shed is usually very easy to break into and people take more interest in *home* security – things like double glazing make life harder for the would-be burglar. There is also far less risk of being caught breaking into a garden shed.

Of course, home workshops are not garden sheds, but many start life that way. Even the purpose-built workshop or the workshop in the garage is vulnerable. Take stock of the easily removable equipment in your workshop and ask yourself if it would be worth while the opportunist thief breaking in and stealing some of the equipment. The answer will almost certainly be in the affirmative. Add to this the fact that the model press hears more and more reports of home workshops being raided in this way and so the risk is increasingly high. Do not think either that living in a terraced house with no side entrance is much of a deterrent; it is quite common for these people to raid a series of garden sheds in one swoop, climbing over fences to get from garden to garden.

So, what to do?

It is time then to take a look at security of our workshop, and possibly one of the best things we can do is not to let too many people know that we keep valuable stock in it. Next, make the doors and windows as secure as possible. Fit good quality locks, on both and ensure that they are used when the building is empty.

No matter how well the building is secured, it is difficult to prevent the would-be thief from entering, particularly if it is a little distance from the house. The next thing to consider is an alarm. This need not be elaborate, the main object of any alarm is to scare the intruder away. He or she is not going to stand around if a reasonably loud bell or buzzer is sounding, and so we must arrange for one to be set off with an unauthorised entry.

Alarms can be purchased and fitted but these are expensive and not always entirely suitable for the building in question. Making one's own is not at all difficult. They can be made to work on various forms of switches, either with a parallel or normally open circuit, or a closed or series circuit which relies on a switch being opened to set off the alarm. This type is normally fitted to a door or window.

The alarm described here is of the parallel type and works on a pressure mat. Pressure mats can be purchased from Maplin Electronics, amongst other sources, as indeed can all the parts required. The mat consists of a plastic bag, or so it appears, with a couple of wires sticking out. The device is designed so that it can be hidden under a doormat, which will not trigger it, but as soon as additional weight is applied, the electrical circuit is operated. The mats cost only around three or four pounds to buy, and are most effective devices.

Whilst battery operation can be used it is as well to use a mains supply so that there is a greater certainty that the circuit will be operational; a back-up battery system can be included, if required. It is also possible to fit the circuit so that a visual display indicates that it is armed.

The circuit shown is made from only a

Left, the l.e.d.; right, the alarm release button.

Left, alarm buzzer from the author's device came from Tandy. Below, circuit couldn't be simpler.

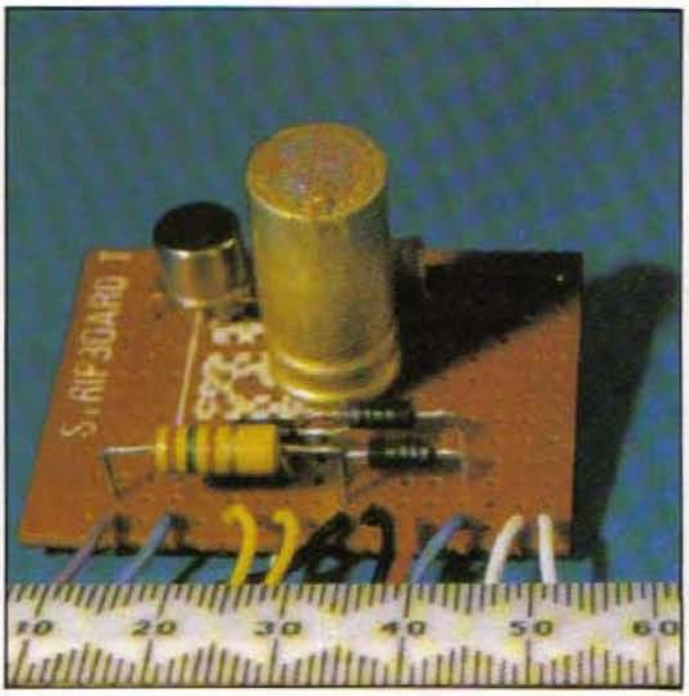

few components and it fits into a box three by four inches in size. The use of a thyristor ensures that, when the alarm is triggered, it locks on and remains that way until disarmed. If one wished, the mat could be used with no more than a battery and sounding device; this would mean, however, that when the pressure on the mat was relieved, the alarm would stop sounding.

Thyristors can be obtained with a current rating of from one to fifty amps and any will fulfil the needs as long as it is capable of carrying the current used by the sounder. The thyristor in the circuit is rated at one amp and any thyristor of that rating will work with the circuit. A typical type would be the C106D.

The circuit is constructed on a scrap of stripboard and a bridge rectifier could be used in the place of the four diodes. The mains side of the transformer is protected by a three amp fuse fitted to the mains plug. If different components are used, it may be necessary to change the gate voltage of the thyristor, and readers who have little or no knowledge of electronics would be advised to use the same basic components as those shown and simply follow the wiring diagram.

How it works

To give some idea how it works, the mains input is reduced through the transformer to 9-12 volts, and then rectified to direct current. The transformer shown, by the way, came from a defunct radio set, as do many of my electrical spares. The current is smoothed by the condenser C1 and passes to the isolating switch S1. When this is closed the circuit is armed and the

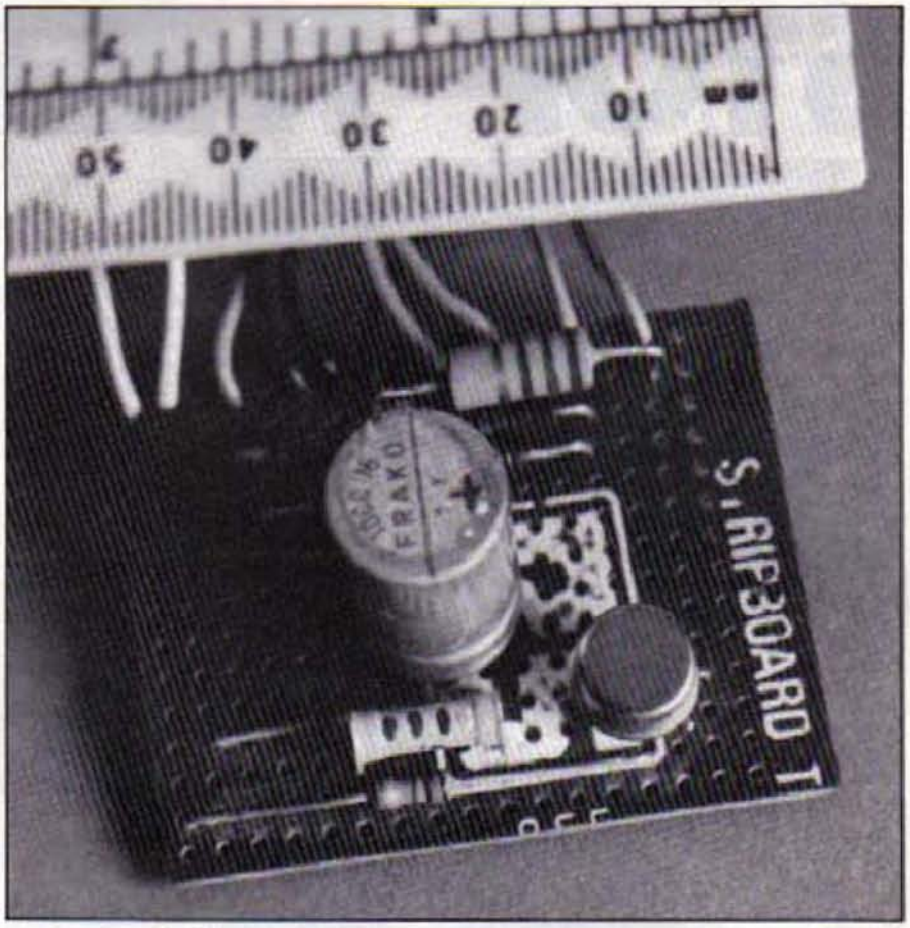

Another (much enlarged) view of the author's circuit; components should be easily available from Maplin or Tandy, etc.

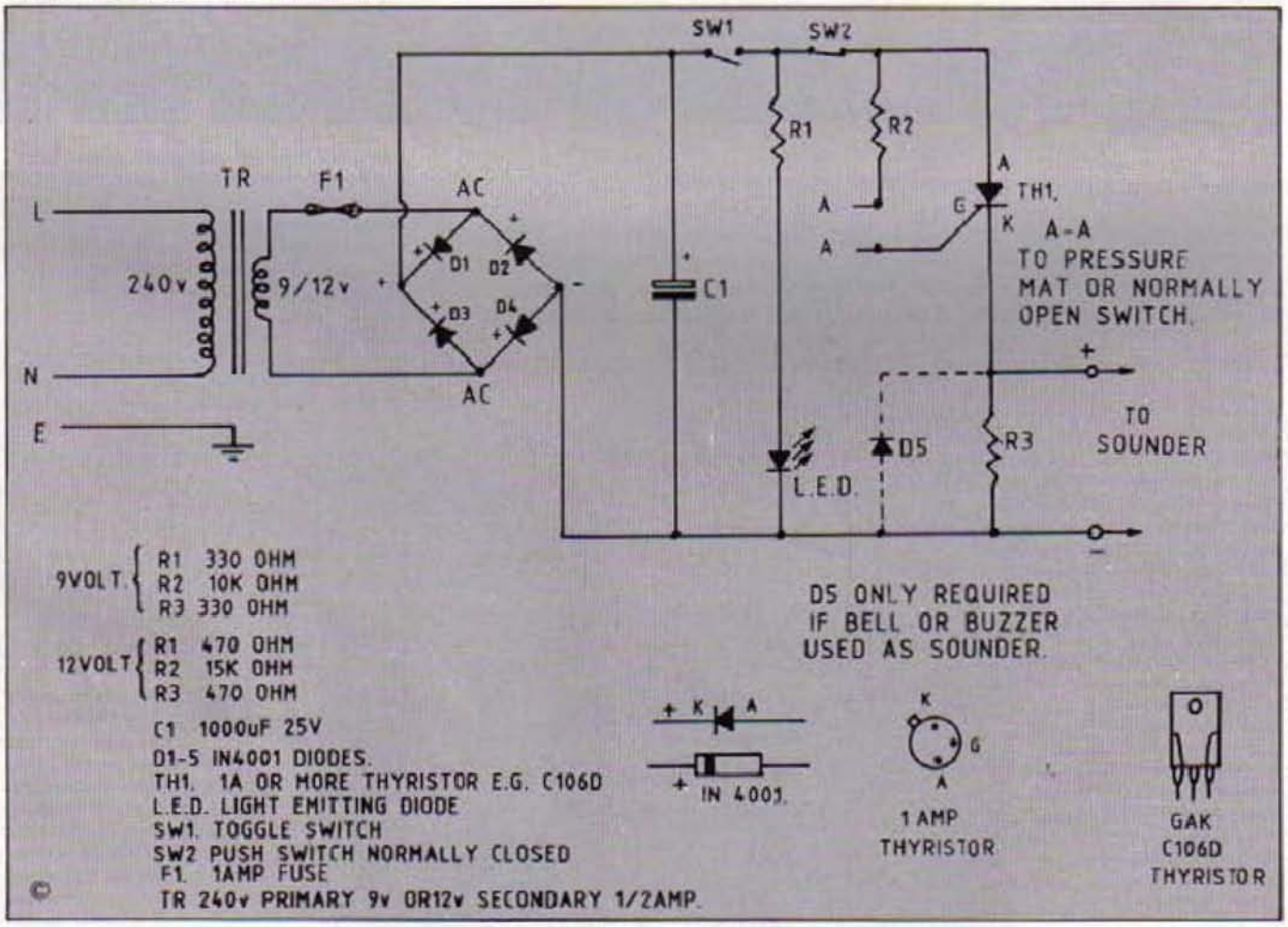

STOP THIEF!

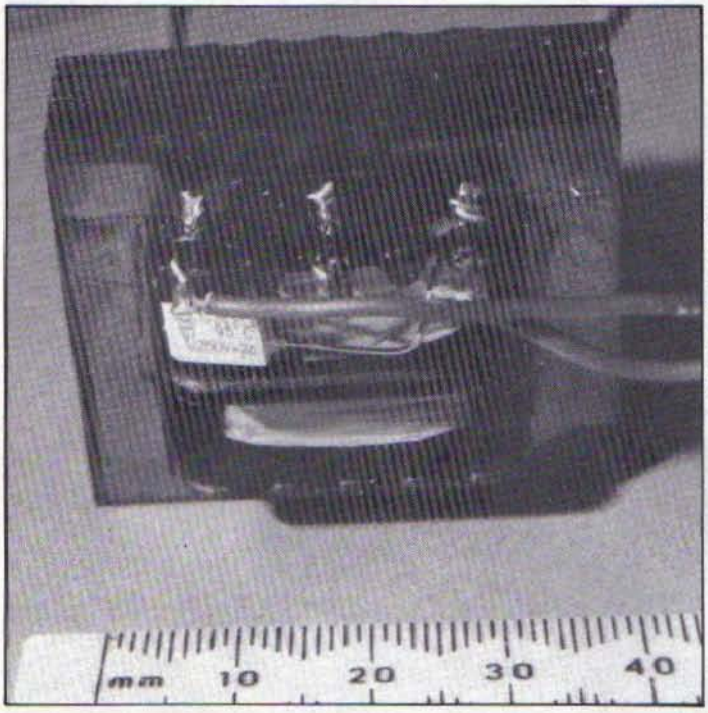

Alarm circuit operates in conjunction with this little transformer which converts mains power to 9-12 volts. This particular component came from an old radio set but equivalents are easily available new. Entire device should be boxed (and earthed if made from metal) when complete.

light emitting diode illuminates. When pressure is applied to the mat a small current is applied to the gate of the thyristor which switches on and stays on, even when the pressure on the mat is removed. This completes the circuit and the sounder is activated. The sounder can be either a bell or siren type buzzer. Resistor R3 is required to make sure that the circuit is latched on continuously. Switch S2 resets the circuit by momentarily removing the supply to the thyristor. These two switches and the light can be sited in the workshop to suit individual needs.

A variety of sounders are available to suit the circuit, remembering that current consumption should be no more than 500 mA (1/2 amp). A piezo buzzer working on this supply should be more than enough to scare any intruder. For the sake of personal and visitor safety, the circuit must be housed in a small box; simple plastic ones can be purchased or a small wooden one can be made. Should a metal one be used, then the box must be earthed. The pressure mat should be covered with a thick plastic bag for protection. Whilst it is quite adequate for normal purposes, swarf, etc. in the workshop might cut into it. In the case of the device shown in the photographs, the mat was put into a heavy green garden refuse type bag, the edges of which were folded over and taped to make it a snug fit on the mat.

All the components for the circuit are available from a number of suppliers. The buzzer illustrated actually came from Tandy but there are many other suitable units. If there are any doubts about getting the equipment, then everything is stocked by Maplin Electronics.

A DRILLING MACHINE

Knowing the depth to which a drill has gone into work is invariably difficult, particularly with some of the cheaper drilling machines. This article by D. O. Coe shows a way of making a very accurate depth pointer that is quite easy to construct from stock materials

The range of Taiwanese and other far eastern machinery available appears to increase steadily. Whilst few people would suggest that they reach the standard of high quality European machines, they do have the advantage for the home workshop of being cheap, and most these days are of good usuable quality.

Having invested in a drilling machine under the Clarke label, which I bought from an Argos shop, I felt that, while it was a reasonable machine, the depth pointer and graduations were difficult to use, and not as precise as I would have liked. I therefore made the alternative shown in the drawings and photographs.

The device uses a large aluminium dial graduated in 1mm divisions; it is easy to see and can be set to zero at any depth. It is fitted over the quill shaft housing. The friction device is a wavy steel washer 1 in. outside diameter, $\frac{3}{4}$ in. bore and 0.12 in. thick, the indicator was made from a $\frac{1}{16}$ in. piece of aluminium angle.

Part two of the device is fitted into part three and the wavy washer is fitted on the shoulder. It is retained with a circlip and both the washer and circlip are easily obtainable commercial items. This assembly is screwed on to the quill shaft spindle and locked with the nut (part one) – again this can be a commercial item. Part four, the indicator, is fitted to the drilling

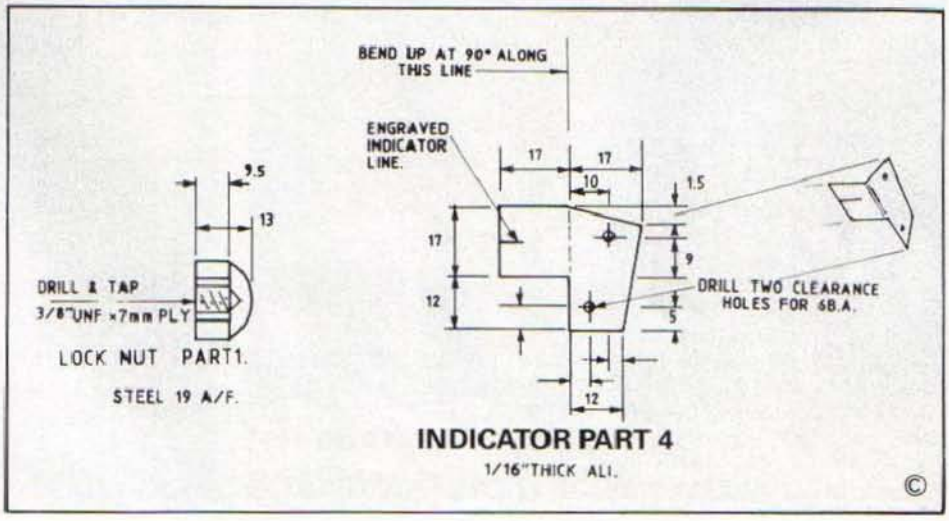

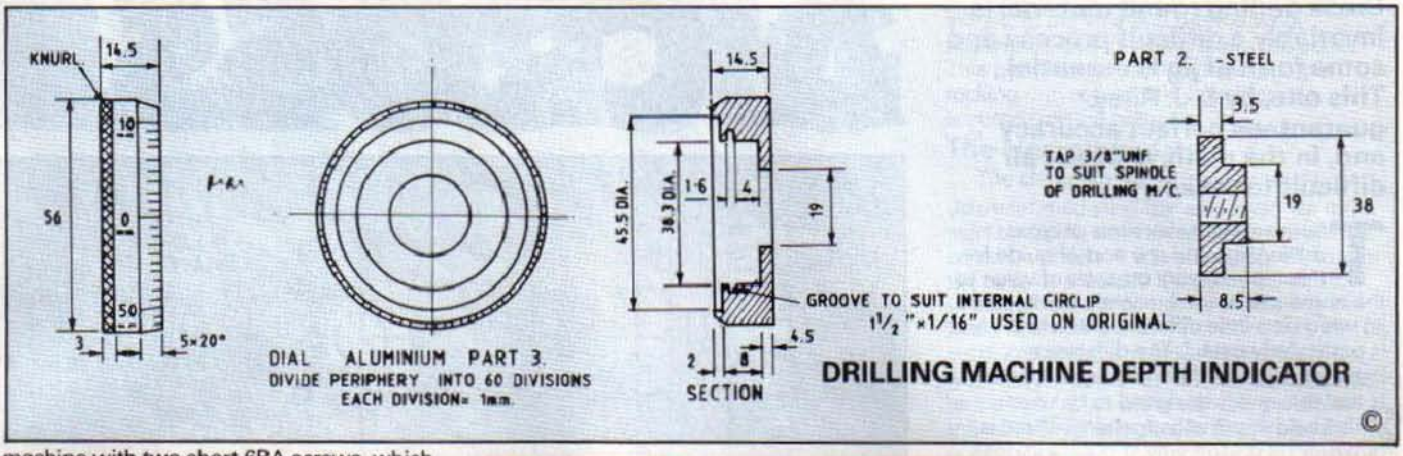

machine with two short 6BA screws, which fit into holes drilled and tapped where required.

The graduations, of which there are sixty, were made on the lathe, using a change wheel for dividing purposes. The numbers were hand-stamped using steel stamps. All the steel parts were chemically blackened, but oil blacking would be a good alternative. The aluminium parts were natural anodised at a local platers. Such firms can be found in the Yellow Pages and they do not charge the earth. Using their expertise can add considerably to the appearance of home-made machinery and parts. After anodising, the numbers and graduation marks were filled with black paint.

The end result is a considerable improvement in accuracy and, whilst the device shown was made for a Clarke machine, the principle will work on a large number of similar machines.

Above, the completed depth gauge in place on the author's Clarke drilling machine – a vast improvement over the standard pointer.

DEPTH GAUGE

Views of the component parts of the drilling machine depth gauge. Dial graduations are in 1mm increments engraved on a Myford ML-7 using change wheels and a dividing device. Hand-stamped numerals are clear and easy to read.

All the steel parts of the gauge were chemi blackened while the aluminium components were natural anodised at a local platers making for a very professional finish.

A CROSS DI

Cross drilling round material is invariably a difficult process and some form of jig is essential. This one, by L. J. Riley, guarantees perfect accuracy and, in the main, is not at all difficult to make

There are many versions of cross drilling jigs and any sort of guide for this type of work must be of value to the home machinist. I recently completed a jig which is a little different and which I find is particularly useful. The difference between this and the more usual type of jig is that this one is designed to be used whilst held in the lathe mandrel. There is however no reason why, if circumstances demand, it should not be put in a machine vice and used with a vertical drilling machine. Personally, I find that cross drilling in the lathe seems to give better control over the work.

The body

The jig is made from a piece of round mild steel bar two inches in diameter and $1\frac{1}{8}$ in. in length. The actual length is one inch, but the eighth will be needed for facing off purposes, and this should be the first job. After facing, turn down to one inch diameter for a length of half an inch and then drill right through a half inch diameter.

The next operation is to cut the vee in which the metal to be worked on will rest. I am lucky as I was able to do this on a horizontal milling machine at evening classes where both machine and cutter are easily available. There are, however, other options: shaping machine for example, or if a vertical milling machine with a tilting head is available, that could be used with the head set over. If the worst comes to the worst, it can be carefully filed out. Starting with a hacksaw, cut to mark the position. This is not as bad as it sounds, as the vee is only a quarter of an inch deep. A good way to finish a vee that is filed in this manner is

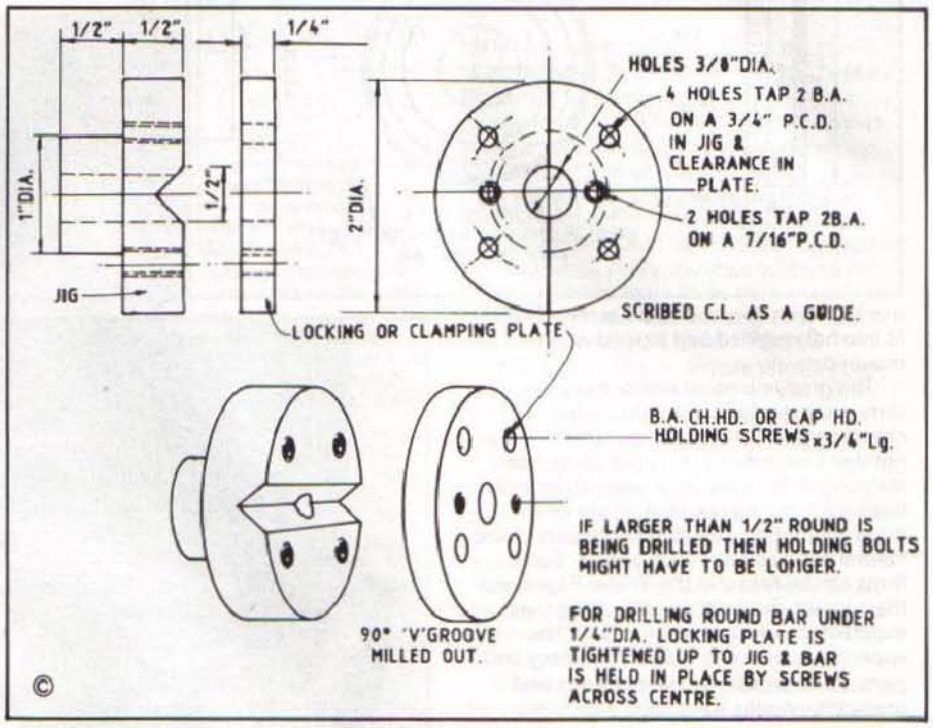

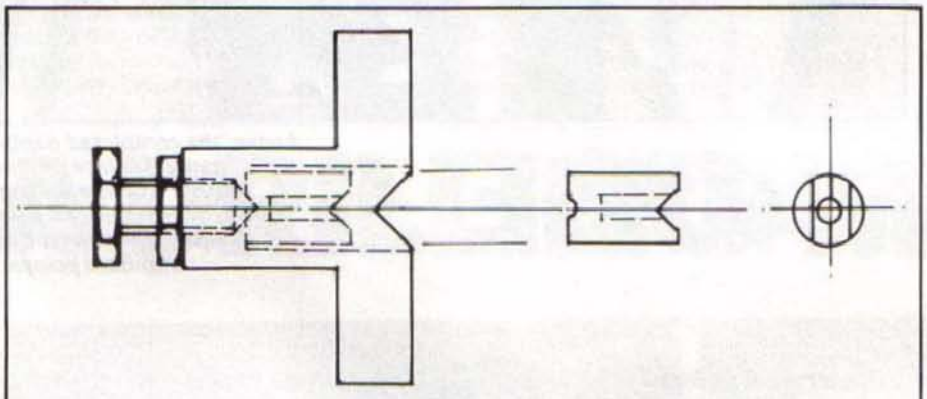

ALTERNATIVE DESIGN USING ADJUSTABLE CENTRE PIECE.

CROSS DRILLING DEVICE ©

Below left, starting with a centre drill to drill a hole in the ½ in. rod. Below, two views of the jig components. Opposite page, top, after the centre drill, a ⅛ in. drill is used. Centre, milling the 'V' on a horizontal mill. Bottom, making a start on the jig – turning the boss.

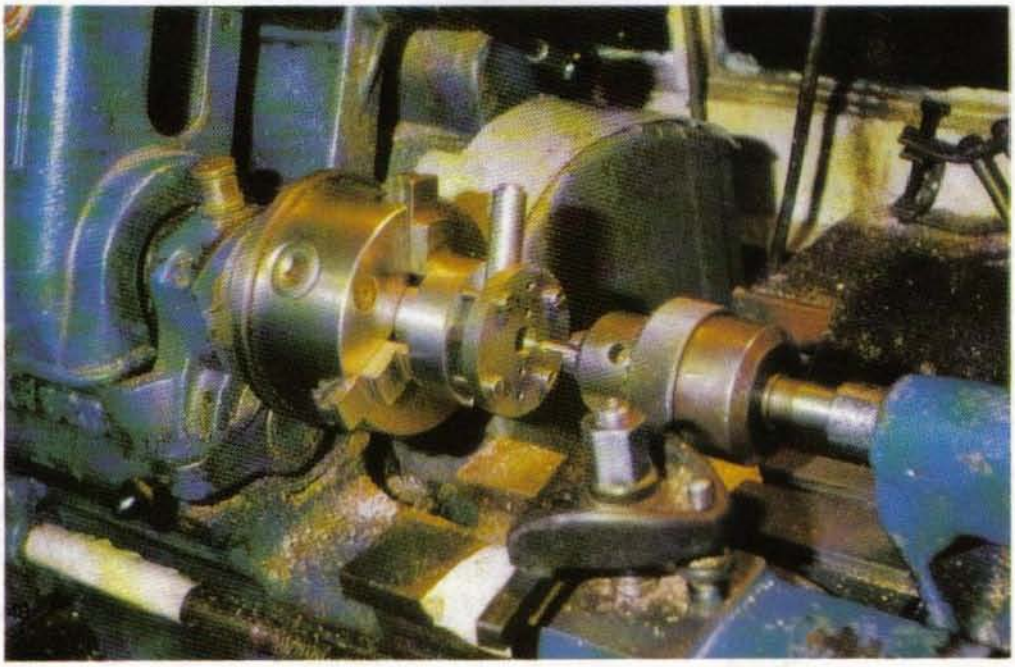

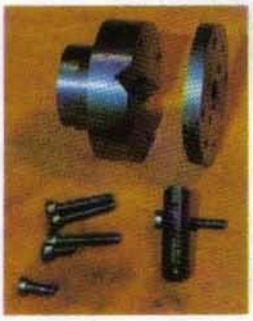

RILLING JIG

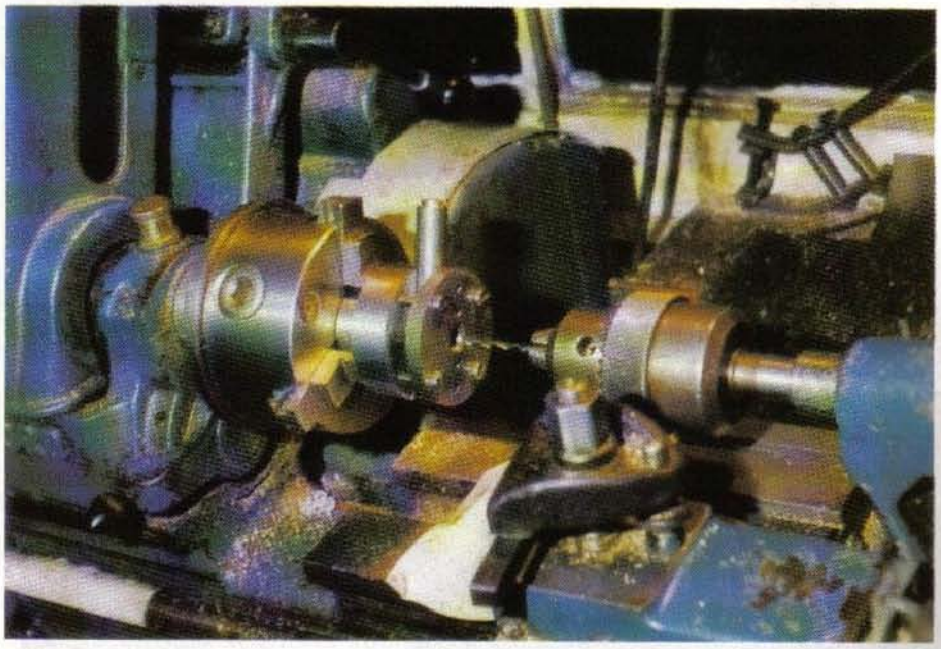

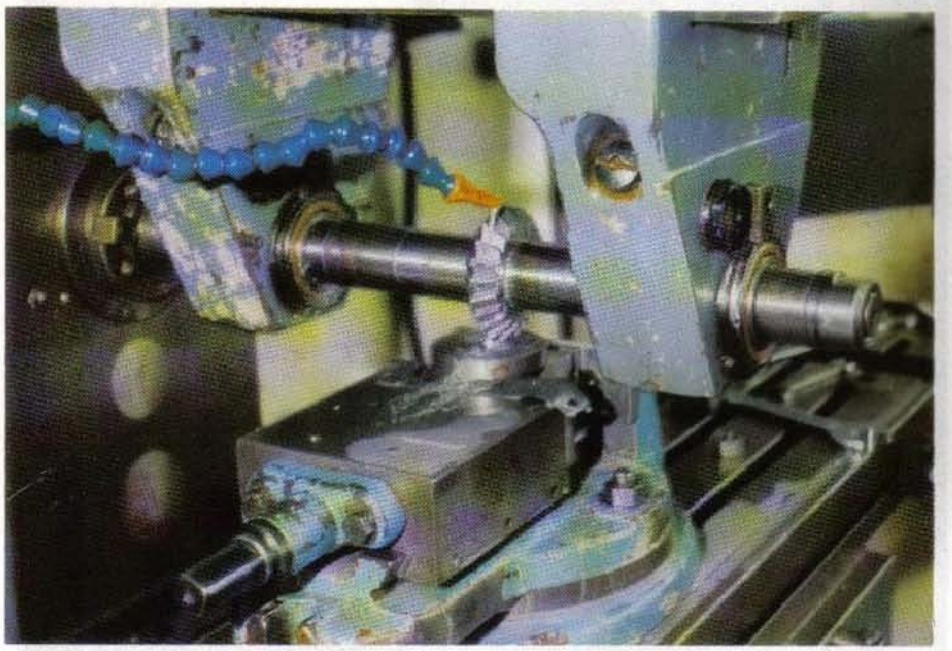

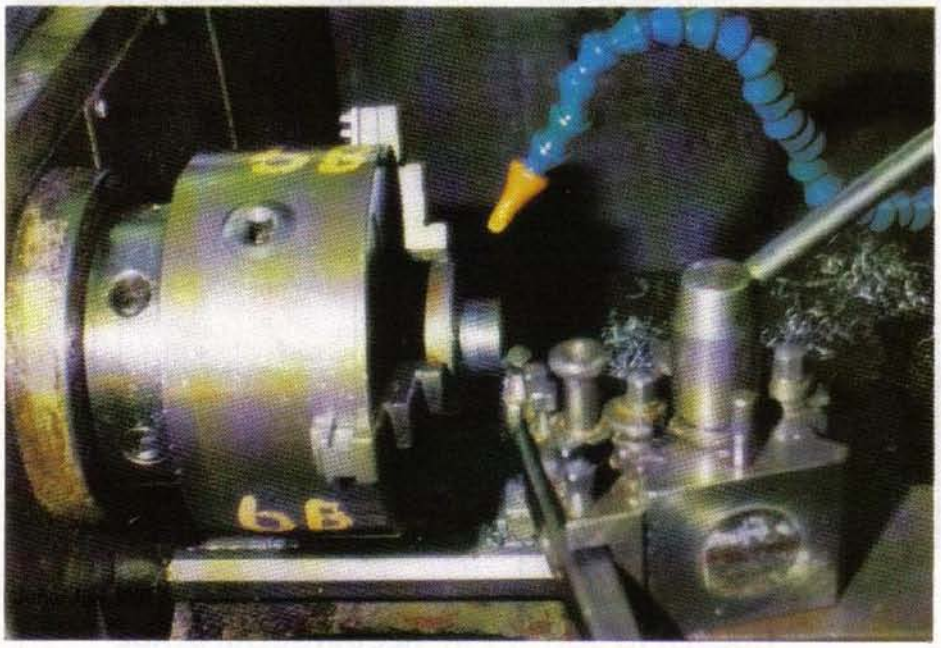

to clamp a large file, say about twelve inches, in the vice and rub the work backwards and forwards along the edge. This prevents the file from setting up a rocking movement, and considerable accuracy can be obtained.

The clamping plate

The clamping plate is also from 2 in. diameter mild steel bar and again we must start by facing both sides. The central hole could be drilled at this stage as well, but for the sake of accuracy it may be as well to wait until the clamp has been fitted to the body. Mark off the four holes in the $\frac{7}{16}$ in. p.c.d. and drill them tapping size for the screw to be used. I used 2BA which seems about right. Clamp the clamping plate to the body and, using these four holes as guides, drill right through the body. Tap the body and then open out the four holes in the clamping plate to clearance size.

Screw the clamping plate to the body and return the assembly to the lathe. With a sharp pointed tool, scribe a centre line across the clamping plate and then drill the central hole. Take the assembly off the lathe, drill and tap the two holes on the centre line (these being to take the screws that secure the work whilst drilling operations take place), and there you have the jig.

An additional touch could be to make up small knurled bolts to hold the clamp to the body and to secure the work. Alternatively, life would probably be easier if the four holes that are used to secure the clamping plate to the body are fitted with small studs, and knurled nuts made for tightening up. The two holes along the centre line are actually used for tightening-up purposes when the work is in the jig.

When in use, the cross hole should always be started with a centre drill as, even with a jig, a drill will be inclined to wander. It will be found that this is a very accurate way of making cross holes, and because the lathe has been used for its construction it is likely to more accurately made than the more usual types.

Improvements

Like all home-made tools, one always looks for improvements. In this case, the need arose to drill some small diameter material near the end, which meant it did not go right across the vee. The problem was solved by making a jig with the boss drilled and tapped $\frac{3}{8}$ in. diameter. The bolt to be used was turned to a point of about sixty degrees. A plug was made up, with a centre in one end and a vee in the other. This allows small pins to be inserted in the vee and the plug to be tightened up via the bolt. The result is that even the smallest of pins can be cross drilled with ease – a very valuable asset indeed....

QUICK TIP

Chatter when turning can be a problem. It is more often than not caused through the lathe rotating at a speed too high for the work, but it can also be the result of the tool being a little too rounded at the cutting edge. If correcting these defects fails, then try putting a piece of thin card such as a piece of postcard under the tool in the toolpost. This will frequently give just sufficient spring to prevent the chattering. Many years ago, spring tools were normal practice but now are seldom seen. The card reproduces the effect of the spring tool.

PARTING TOOL HOLDER

All tool holders can be made in a variety of ways to suit the individual. This parting tool holder designed by H. K. Hall is simple to make and solves many of the problems associated with this type of work

Having broken many parting-off tools ground from square tool stock (a long process) and these also only being suitable for small diameters, it was decided to invest in some parting-off blades. I had the blades in my possession, but I still required means of holding them in my Super 7 rear toolpost.

The toolpost has a boat for height setting and will take up to a ½ in. square shank. Proprietary holders required some overhang at the front which would reduce the space between the parting tool and those mounted on the top slide and would also reduce rigidity and were costly, so I decided to make my own and, after some

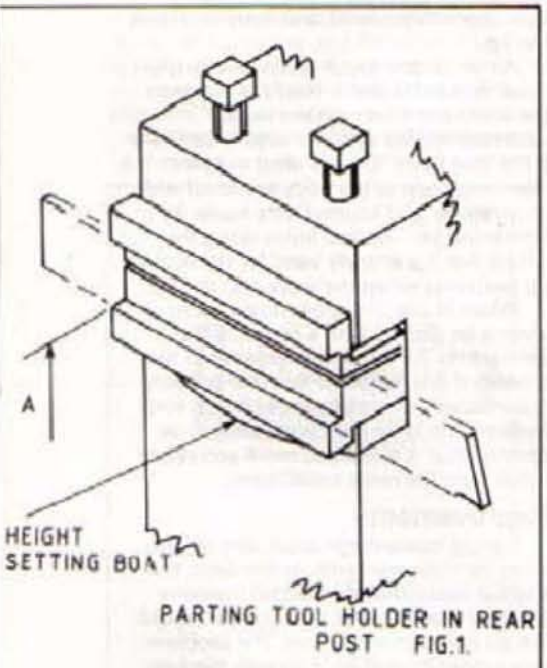

PARTING TOOL HOLDER ©

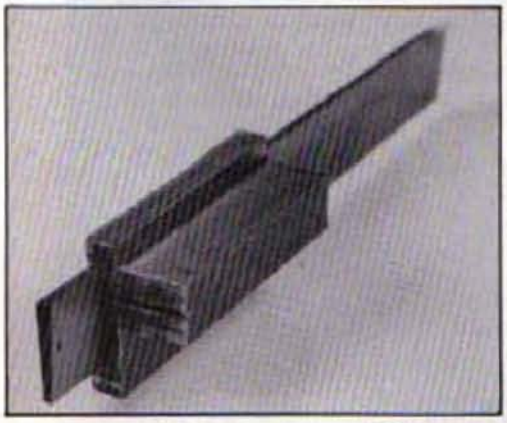

The blade in this view can be seen to be of the type which has a tapered rather than a rectangular section; note also the angled edges.

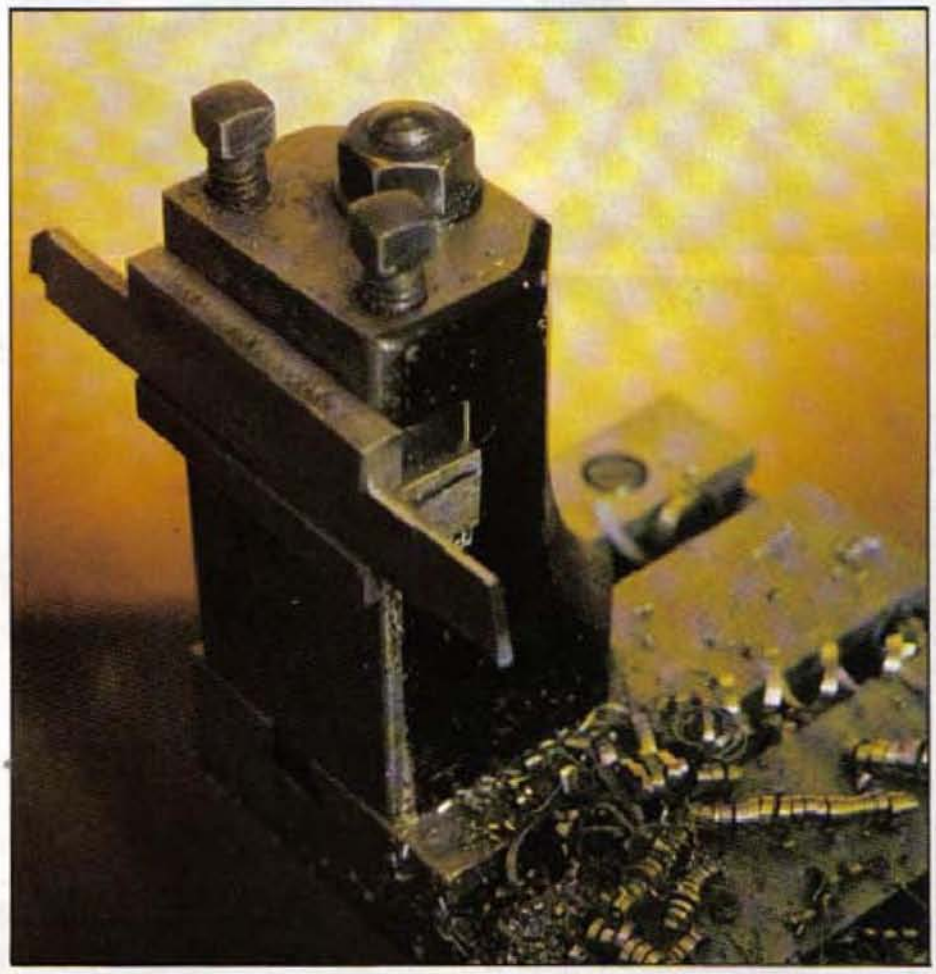

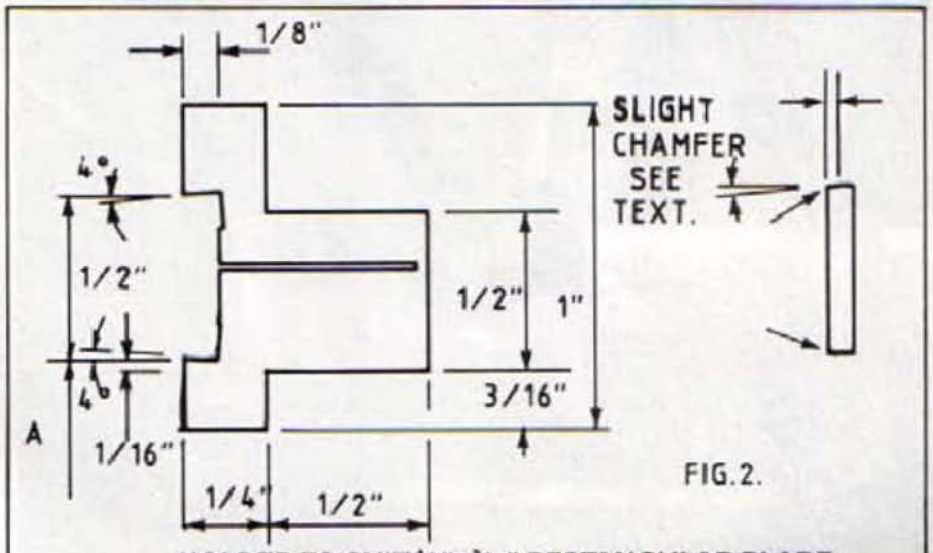

HOLDER TO SUIT ½"×3/32" RECTANGULAR BLADE ©

thought, came up with a simple design, but one which has proven to be extremely efficient.

The principle can be seen in **Figure 1.** The screws in the toolpost both clamp the blade into the holder and the holder into the post. The holder is slotted to about $\frac{1}{32}$ in. or a little less from the rear face. This permits the holder to flex under pressure of the clamp screws to hold the blade and yet still withstand the pressure placed upon it. The blade can easily be slid out for larger diameters, though, of course, it will require resetting for height.

There are a number of different shapes of blade and also differing sizes. The two indicated in **figures 2** and **3** are, **Figure 1**: Rectangular $\frac{3}{4}$ in. × $\frac{1}{8}$ in. **Figure 2**: Tapered $\frac{3}{4}$ in. × $\frac{1}{8}$ in. The rectangular type are 90 deg. on all corners (it will, of course, require grinding to a taper over part of its length for side clearance).

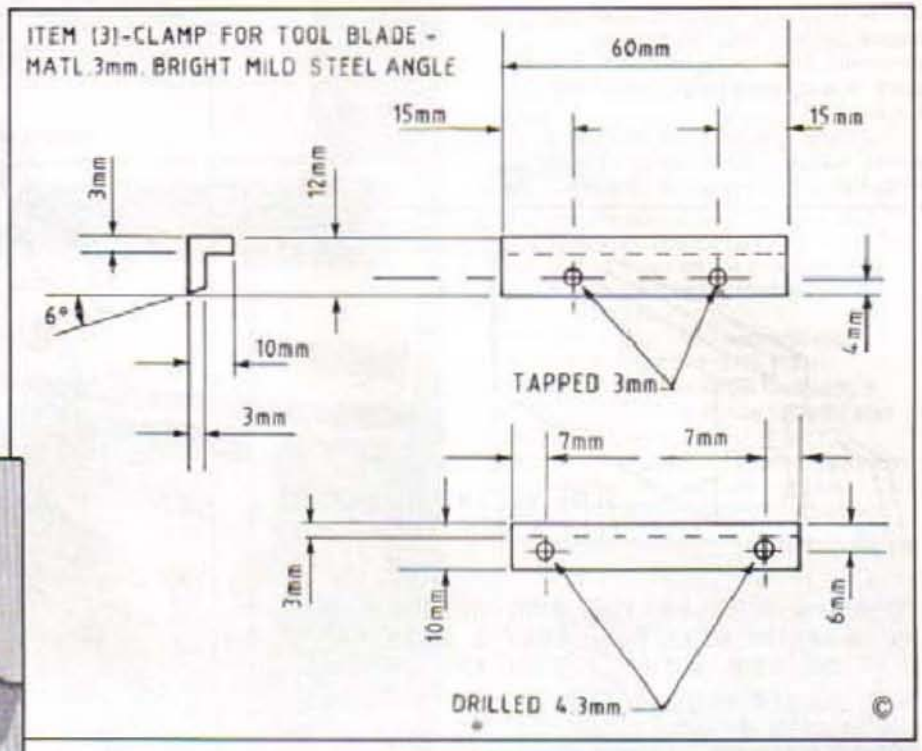

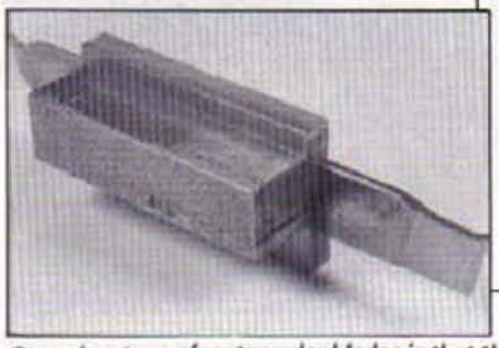

One advantage of rectangular blades is that they can be sharpened for use at either end. Tapered blades cannot be turned round due to their angled edges.

This shows the unit orientated as it would be when used on the top slide, rather than the rear toolpost.

It must be noted that, even though the blade has 90 degree corners, the holder is machined with an approximate angle of four degrees and to a depth of $\frac{1}{8}$ in. for a $\frac{3}{4}$ in. wide blade. This ensures the blade is held securely. A very slight chamfer ground onto both the upper and lower outer edges of the blade would make it even more secure.

The tapered blade is a better approach, even though the holder is a little more critical in its manufacture, but still worth the extra effort. The dimensions will, of

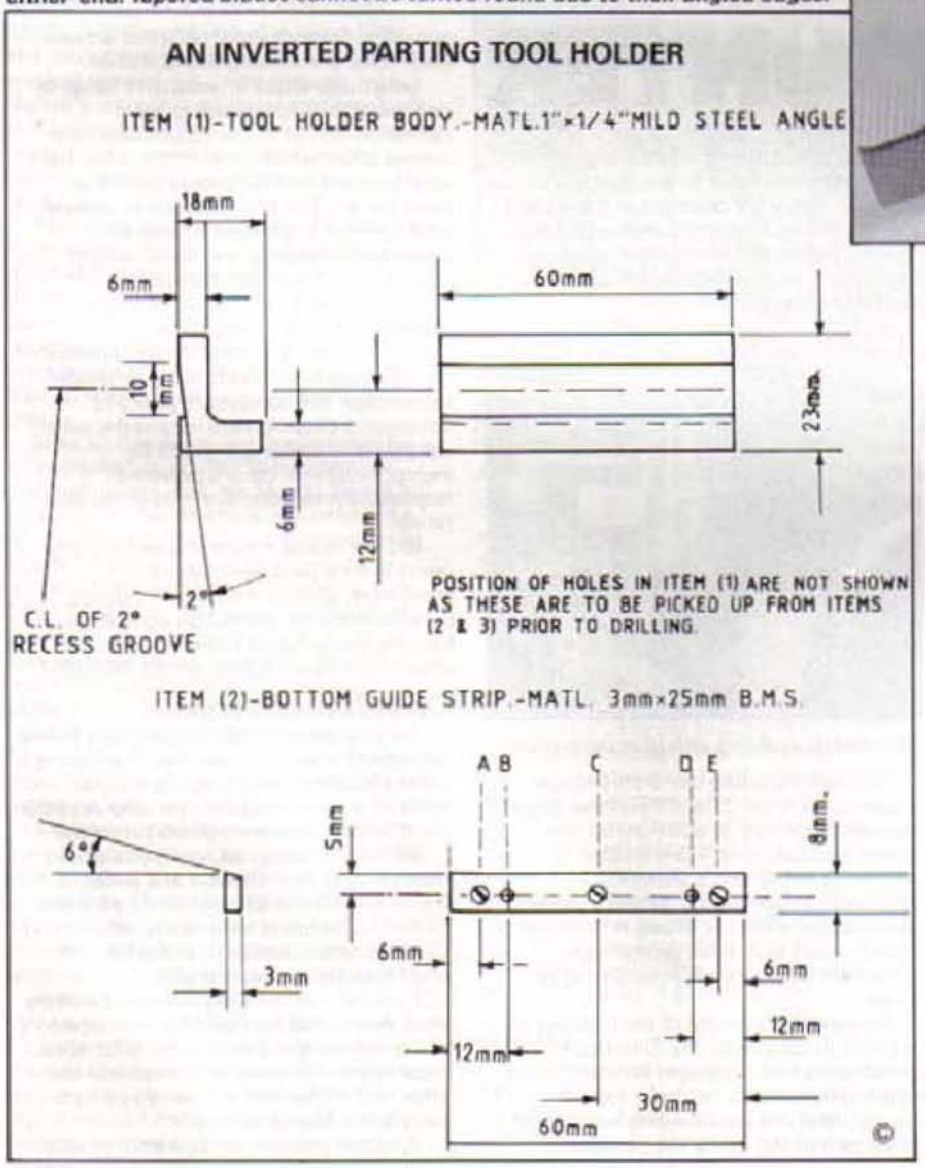

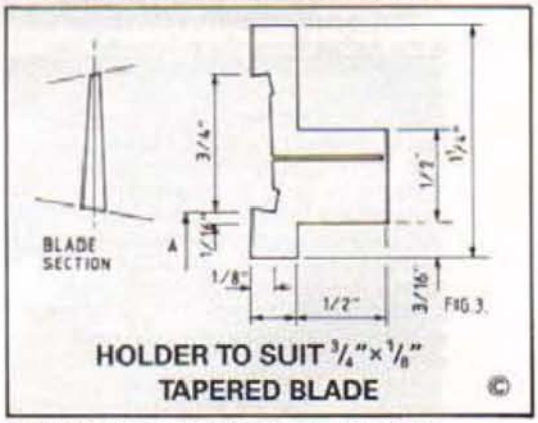

course, require changing for other size blades, but take note that the ½ in. dimension must be maintained to ensure point 'A' is at centre height with a level blade.

For those without a rear toolpost, a similar holder could be used on the top slide, but with dimensional changes.

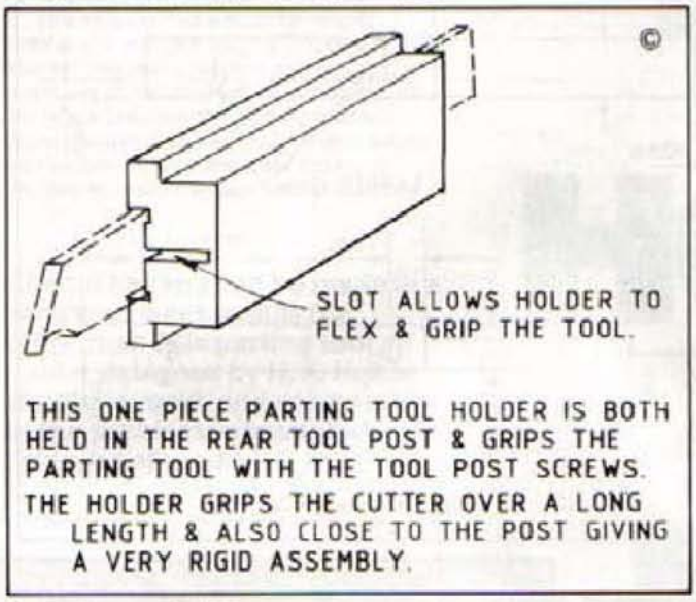

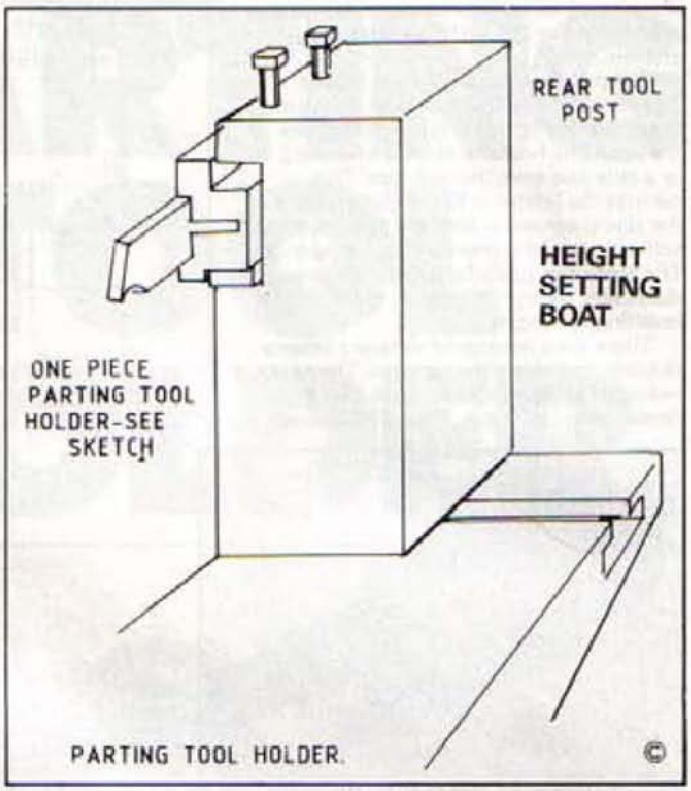

TRADE COUNTER

Welding: A safe practice

In every modern workplace, particularly in the engineering industry, a greater awareness exists of dangerous substances used at work. This is largely due to new legislation and major tragedies being widely reported in the press. There seems little point in model engineers making every effort to safeguard their health at work, if in their own workshop they do not adhere to the same careful practices.

Welding with its associated activities including metal finishing, grinding, turning, cleaning and spraying is an area of high risk. It is an application where it is vital that people have their eyes, faces and hearing well protected, as well as guarding their lungs from hazardous dusts and fumes.

Only recently, research work carried out at the Aarhus University in Denmark has highlighted new health hazards associated with exposure to welding fumes. These tests indicate that exposure to fume can lead to reduced fertility amongst welders.

In the last decade Racal Safety, the leading manufacturer in the field of powered respiratory protection, has introduced products which have proved popular with welders, such as the world-famous Airstream helmet. Racal's latest product, designed to enhance the safety of welders, is the Swiss-made Solarmatic welding shield.

The revolutionary welding lens is solar cell powered and, within two milliseconds, automatically darkens from a clear state to the required shade number according to the welding process in use. The fully automatic shade adjustment overcomes many of the problems associated with traditional nod-down and handheld visors. Operators are no longer tempted to look past the shield during positioning, which has made them liable to the dangers of 'arc eye' and heavy UV radiation at the instant the arc strikes. This, combined with hands-free operation, allows uninterrupted use resulting in an improvement in safety, quality and productivity.

Solarmatic welding shield in operation.

The self-adjusting unit with a single shade suitable for different welding process requirements may, in addition, be fine tuned manually over 4 DIN shades according to the user's individual sensitivity to light or the different welding process and materials in use. A filter unit is incorporated to provide guaranteed ultraviolet and infrared protection at all times.

Powered by the light of the welding arc via built-in solar cells, the Solarmatic benefits from an advanced sensor system which differentiates between natural sunlight and the arc, enabling welding jobs to be carried out safely even in bright sunshine. Solar-charged batteries act as a back-up to ensure long-life operation.

Solarmatic offers an extensive range of additional features including fume deflection and an easily replaceable clear convex cover which protects the visor from weld spatters and eliminates reflection from the arc. The shield is built to provide total comfort to all wearers with an adjustable headstrap and equal weight distribution. It may also be used in conjunction with spectacles, hearing protectors or disposable masks.

Racal Safety has a worldwide reputation for high-quality products using advanced technology. The company's policy of continuous development means the solar-cell powered welding lens will be incorporated into Racal's powered respiratory protection systems in the near future.

Today's model engineer spends many hours in their own workshop. It is imperative, given the medical evidence, to provide adequate protection against the hazards encountered in welding. Further details from Racal Safety on 081-902 8887.

Open days at Mercer

Do you see yourself as basically a hobby woodworker who is interested in knowing more abour metalworking? Or are you more of a hobby metalworker who sees the need to improve his woodworking skills?

Whichever camp you're in, you would have been in your element at a series of 'Open Days & Exhibitions' held by Mercer Skilled Crafts Ltd at their newly refurbished Cleckheaton showrooms on the 6th, 7th and 8th of December last year.

Looking after a steady stream of visitors were Austin and Michael Mercer – directors of the company – and Lindsay Todd, who most of you will know as the voice at the other end of the phone when you ring to sample the Mercer service.

Whether you wanted to watch, or take

Harrison's 280 Trainer CNC/manual lathe on view at Mercer's open day.

part in, a demonstration of that machine tool you've had your eye on – or whether you just wanted to browse through Mercer's extensive stocks of small tools and equipment for model engineers, your needs were catered for. And, speaking of catering, there was food and a range of hot drinks, too.

The open days were put on for two main reasons. On the one hand, it was decided that the completion of the showroom's facelift called for a celebration, but the company also wanted to seize the opportunity to make potential customers more aware of the wide range of products now on offer – both from stock and to order.

New on the scene, and surrounded by an interested group during frequent demonstrations, was the Mercer Type 1340 centre lathe. This machine has attracted a lot of interest and not a few firm orders. At £2,850 plus VAT (Ex works, Cleckheaton) with the following standard features: 6 in. 3-jaw S C Chuck; 8 in. 4-jaw independent Chuck; 4-way indexing toolpost; coolant system; fixed steady; travelling steady; removable gap bed (for 17½ in. swing); single phase, 240 volt, 1½ hp motor drive; 13 in. swing ×40 in. between centres – the Type 1340 will win many friends among those model engineers who work in the bigger gauges.

Throughout the three-day event, there were demonstrations by several of the well-known names in the machine-tool world, among them Ajax, Harrison, Multico and Rishton. The Ajax display included a range of their well-known products, many of which are currently in stock at Mercer's.

Harrison's 280 Trainer 5½ in. CNC/Manual lathe drew admiring glances, as did a standard Myford Super 7 with some futuristic features. This Super 7 had been equipped by Mercer's with an Accurite III digital readout and was very popular with visitors for hands-on experience of new technology.

Mercer's Lindsay Todd puts the Mercer Type 1340 through its paces.

The Multico Super Shop – not just a woodturning lathe, more of a self-contained woodworking factory – and its demonstrator, Geoffrey Warrener, were kept busy showing their mettle to interested spectators.

The new Rishton Promill – 35 vertical miller tempted one or two browsers away from the line of bigger millers on display.

It was unfortunate that the third of the open days coincided with the worst weather of the winter, but the Mercer team and their supporters were more than satisfied with the amount of interest the three-day event has stimulated.

Will there be another event, this year perhaps? Optimism is the name of the game, say Mercer Skilled Crafts. Details from Mercer at Springfield Works, Moorside, Cleckheaton, West Yorkshire BD19 6JT. Tel: 0274 874586/872861.

Gripfill

Gripfill is a high-strength, one-part, gap-filling adhesive which has been specially formulated to bond virtually any two surfaces together. Materials which may be bonded with Gripfill include wood, laminates, plastics, metals, brick, stone, plaster, rigid insulation,uPVC windows, hardboard and chipboard.

Gripfill's versatility means that it is suitable for a wide variety of leisure and hobby tasks, which obviates the need to purchase a range of single-purpose adhesives. It is particularly suitable for use in the manufacture of large models, and general wood and metal working. An added benefit is that it can be cut to shape once dried and can thus be cut flush where a gap is being filled.

Gripfill has also been successfully employed to bond sink units, fitted furniture and metal window frames to a variety of surfaces, so it may be used cost effectively for a whole host of DIY applications. A range of general repairs can be undertaken with just one product.

Gripfill is a solvent-borne filled rubber resin. It is supplied in cartridges with integral nozzles for use in conjunction with a standard caulking gun. Gripfill can be applied as a continuous bead or in the form

of blobs at spaced centres depending on the object to be bonded. Temporary mechanical support may be required to ensure satisfactory adhesion when the object is particularly heavy. Details from Colas Building Products Ltd., Riverside, Saltney, Chester CH4 8RS. Tel: 0244 674774.

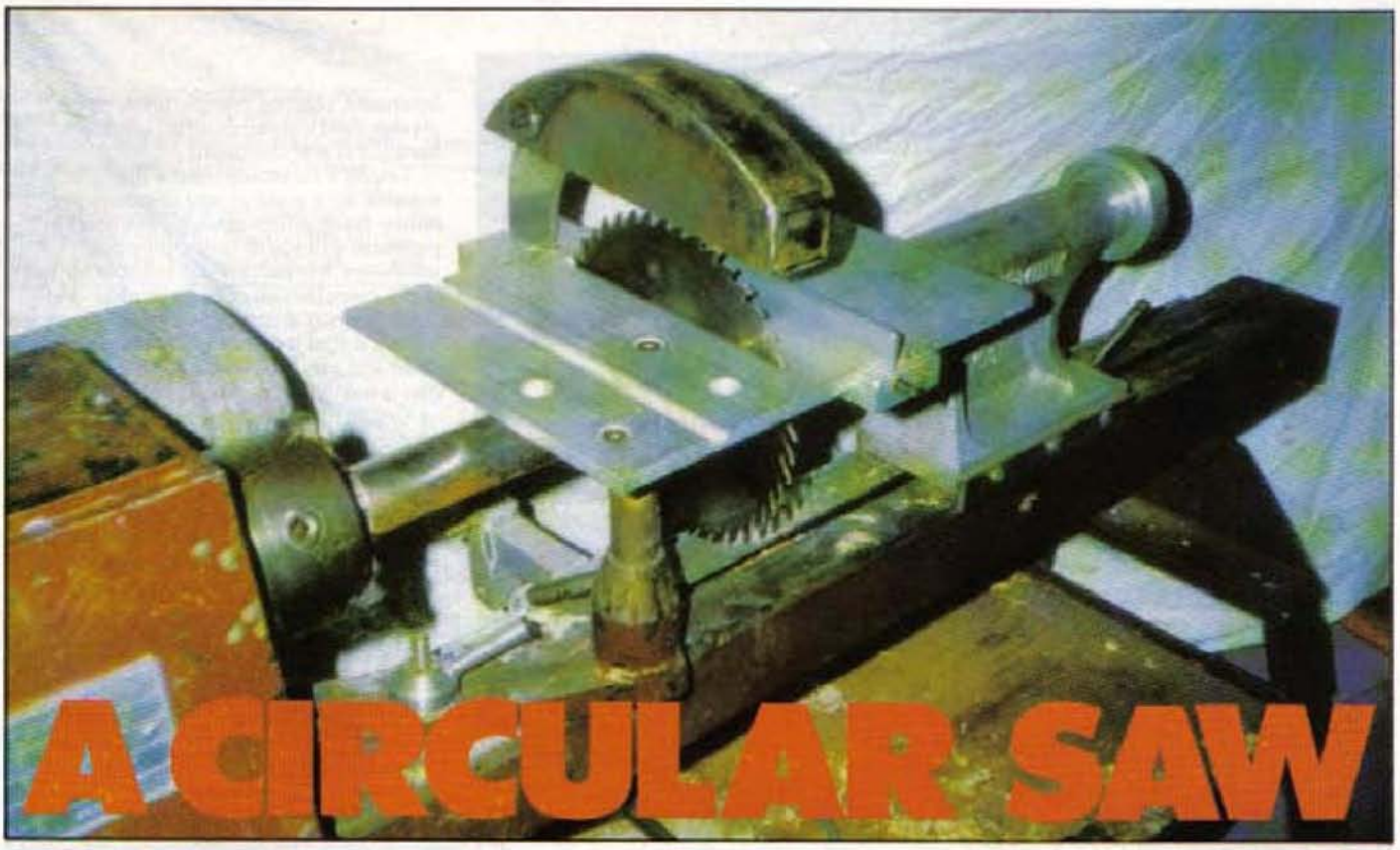

A CIRCULAR SAW FOR THE CHIPMUNK

The Chipmunk wood turning lathe described earlier by Dyson Watkins has proved popular with readers. In this article he goes on to describe a circular saw attachment for the lathe

The accessory to be described was decided upon after considering the alternative course of constructing a fully motorised machine. The main reasons for this decision were:-

a. The expense of purchasing a motor.

b. The extra space needed to store a self-contained machine rather than a smaller accessory.

A most important consideration is that of safety, and it must be stressed that no shortcomings should detract from this aspect, as a saw is a potentially dangerous machine, a fact about which most constructors are doubtless aware. The Factories Act relating to the use of circular saws will not apply to the home constructor, but it would be as well to comply with the Act as closely as possible in the interests of the would be user, especially where the possibility exists of another person using or acquiring the machine.

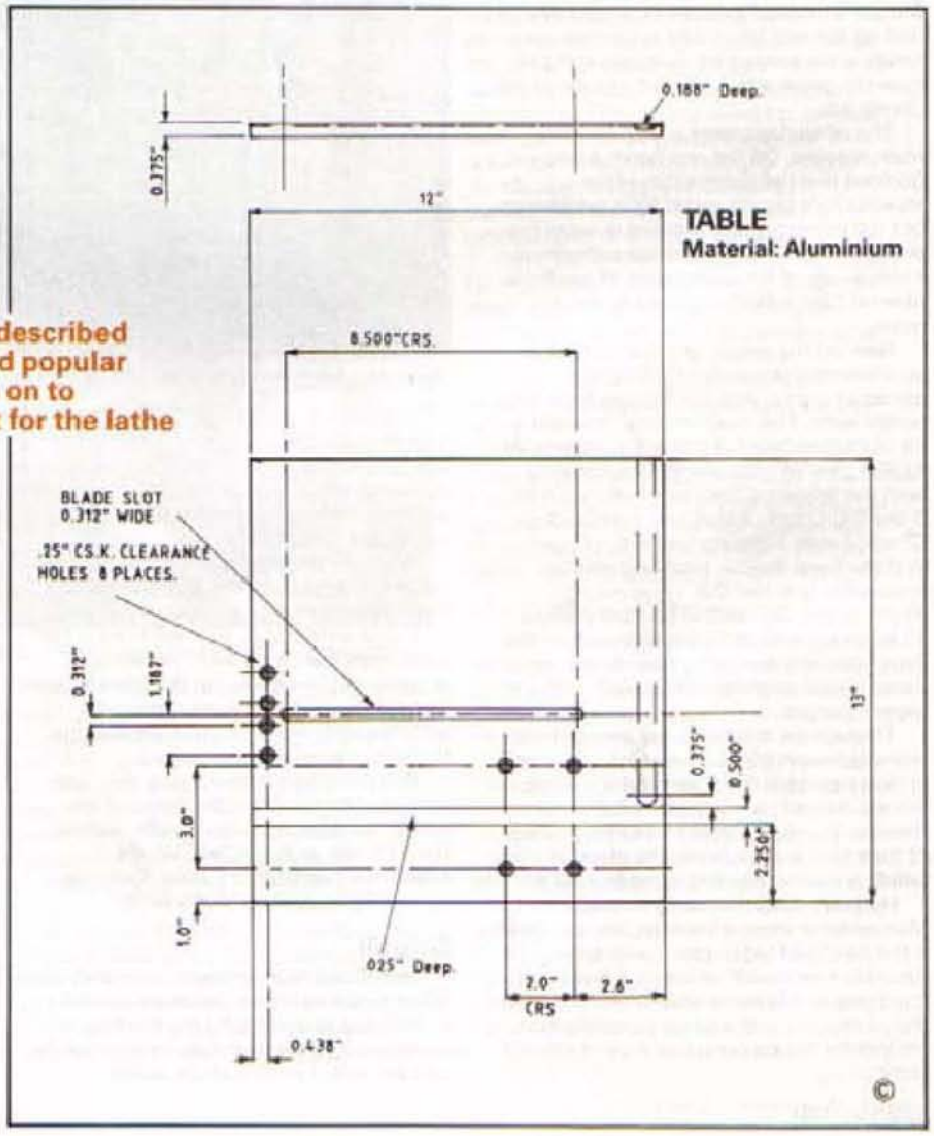

Upper blade guard

The guard is made up from 16 standard wire gauge mild steel sheet. Cut the material to size and file up the edges to size and weld or braze the pieces together, first stitching them together and finishing off with continuous weld. Mark out the clamping hole position, and drill through 0.5 in. diameter. The guard bushes should present no difficulty. Machine them so as to give a rattle-free fit in the guard. The

flanged bush is welded into place in the guard, whilst the other bush with the clearance hole is left free to slide.

The table

Start by squaring up the table top. This is best done on a milling machine, and this facility is best for the blade slot and the mitre guide groove. Clamp the material down flat on the milling machine table, and mill the first edge. Next mill one of the adjacent edges at right angles to the first. It might be useful at this stage to clamp a straight edge on to the table against which the material can be clamped square. Then mill the groove for the mitre guide followed by the blade slot. The fixing holes for the support column will come later.

Next turn the material over and set up for milling the fence slot. It would be advisable to clock up the edge of the sheet to ensure that the 0.25 in. dimension remains accurate over the whole length of the slot, to avoid wedging of the fence in use. It might be worth mentioning at this point that the width of the table can be increased if so desired, but if you do decide to change the width, don't forget that if the fence groove is extended as far as the mitre fence groove, then the cutter will break through. The length of the sheet can be changed if desired, and may be desirable to accommodate a larger saw blade, thus necessitating a longer saw slot. The saw table can now be placed to one side until the support bracket has been completed.

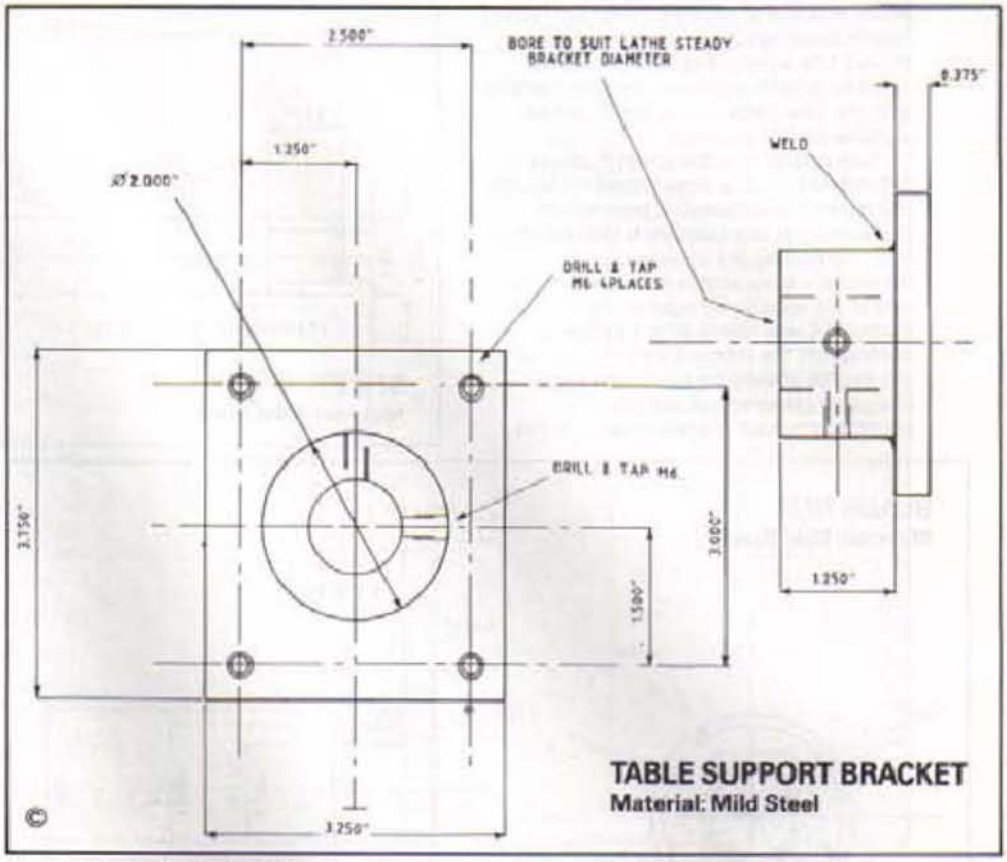

Support bracket

This item is fabricated, although it can be made from solid, but the latter is unnecessarily wasteful in both material and time. Make the bush complete with the threaded hole, and the plate which will form the flange, before welding them together to form the bracket. Next turn up a spigot in the chuck to be a close clearance fit in the bore of the bracket. Clamp the bracket on the spigot using a screw in the tapped hole, and face up the top of the bracket which will become the mounting face. This will ensure squareness of the table in use. Now clamp the bracket to the underside of the saw table and spot through the holes. Finish drilling the holes and countersink. Screw sizes are of course not hard and fast, and any other thread types are exchangable as long as they are adequate in terms of physical size and strength. Metric sizes have been shown, simply because they were available at the time.

Riving knife

In the interests of safety, do not neglect this most important component. This device prevents the timber from closing on the blade as it is being sawn. Without it, the timber could be thrown upwards by the back of the balde, and then ejected forwards towards the operator. Please be warned!

A piece of stainless steel was available and it was therefore used, but a piece of gauge plate would probably be a better choice in terms of strength and springiness. In order to decide on the correct thickness to use in your particular case, the kerf width left by the blade needs to be known. The easiest way to measure this without running the blade is to lay it on a flat surface, place another piece of sheet on top and measure the gap in between the surfaces. Use material of a thickness equal to the gap width.

Do not be tempted to substitute material which is appreciably thinner, or the riving knife will be ineffective. The chamfer on the leading edge needs to be smooth, and the curve should ideally form an arc whose centre is coincident with that of the blade. The knife should be as close to the blade as is practically possible when the table is adjusted to give maximum depth of cut.

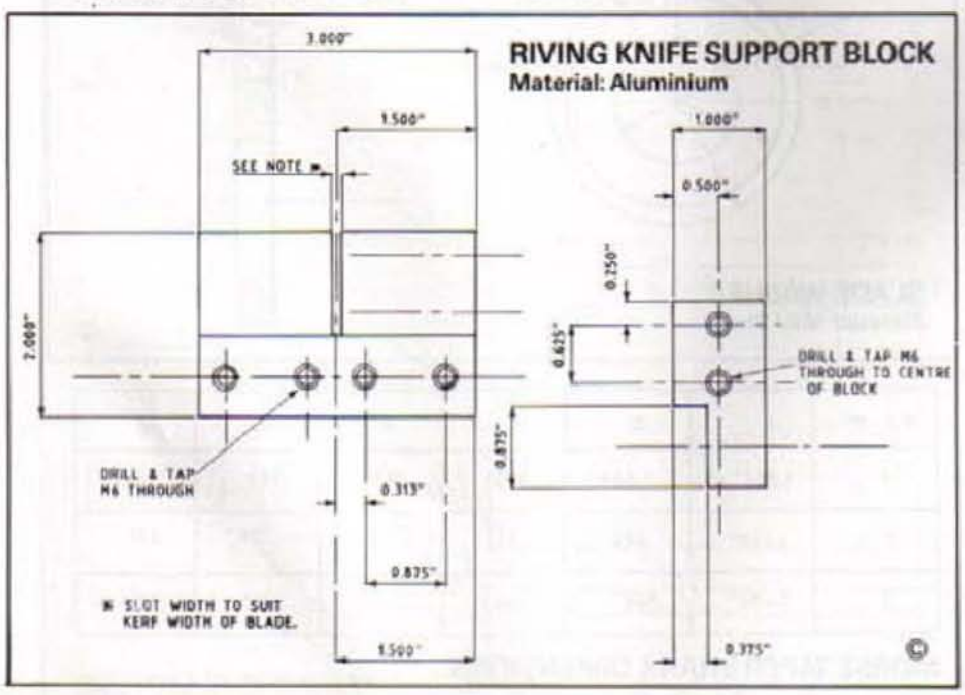

Riving knife bracket

Machine this component accurately, so that its top surface will be at the same level as the saw table top after final assembly. If it projects above the table, then timber being sawn will be prevented from passing over the table easily. The bracket can be milled on the lathe quite easily if need be, as it is small enough to be held on the vertical slide. When ready, clamp the bracket in place on the table, taking care to align the riving knife slot with the centre of the saw slot. Spot through the fixing holes, then drill to tapping size and tap the threads to suit.

Spindle

Use a piece of 1.5 in. diameter mild steel bar to machine this item, as it does require to be fairly substantial in order to avoid any possibility of excessive deflection or whip in use. All turning is done between centres. Rough turn first, as there is quite a lot of

waste material to remove. Finish turn when nearly down to size, and screwcut the thread. Use a fairly fine pitch thread in order to achieve a secure clamping force to grip the saw blade; about 20 TPI will be suitable for the purpose.

Take care to turn the support spigot accurately so that a close clearance fit with the bearing is achieved. A point worth mentioning at this juncture is that initially I tried supporting the spindle on a generously sized centre drilled hole in the end of the spindle for support by the tailstock. It was found after a period of sawing that the tailstock was not providing the degree of support necessary for complete safety and some vibration became apparent. A small change in the design was decided upon, and the end of the spindle was drilled and reamed to accept a dowel to run in a ball-bearing supported by the tailstock, details of which are given. This method may be used if desired, or the spigot may be turned on the end.

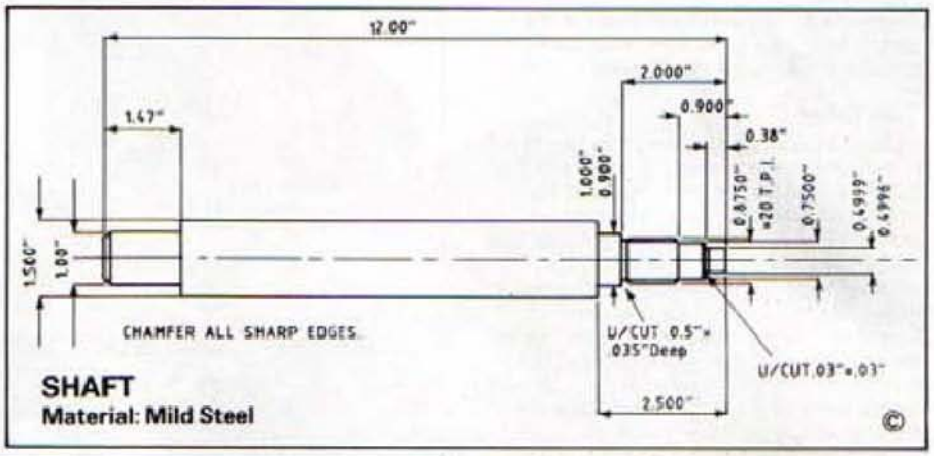

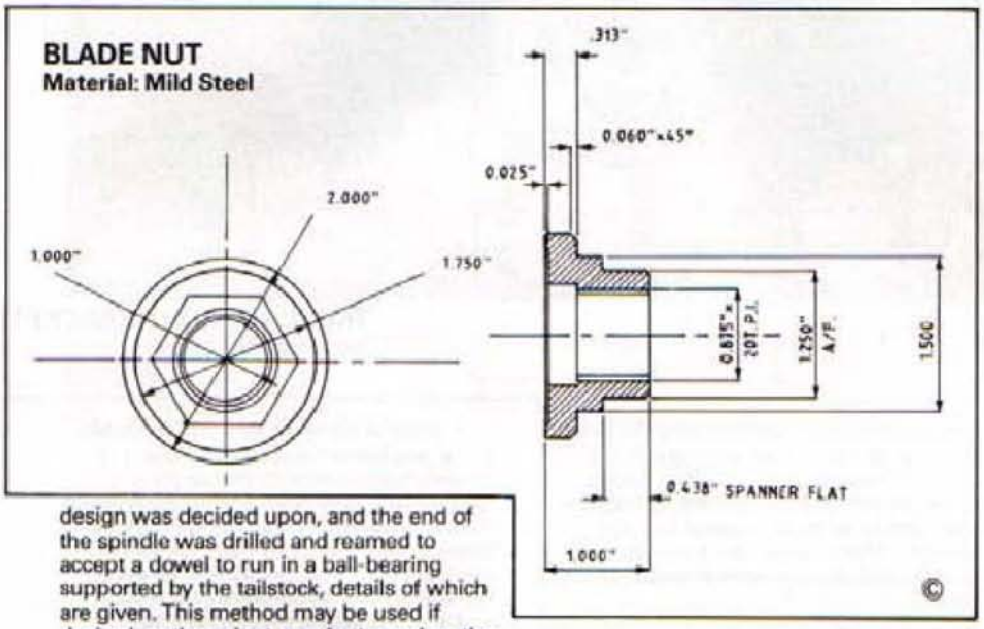

The drive end is simply gripped in the lathe chuck when in use, although, if you prefer, a female thread could be machined in the end of the shaft to match the spindle nose thread of your particular machine. This would be the better choice and would avoid any danger arising from the chuck jaws during use.

Under table guard

The blade guard fitted beneath the table is made in the form of two boxes, one of which fits inside the other. The reason for this is to ensure safety from accidental contact with the blade at different settings of the table required during adjustment of the depth of cut, i.e. raising or lowering the table. One part of the guard is fitted to the machine bed, whilst the other is attached to the underside of the table. At the lower rear end of the box which is attached to the bed is fitted a short tube the diameter of which is made to fit the domestic vacuum cleaner hose which makes an effective dust extractor. The vacuum cleaner hose should, of course, fit over the exit tube or a sawdust build-up will probably occur. Ensure that the motor in the vacuum cleaner is not of the brush type – arcing between brush and commutator in the presence of sawdust could well cause an explosion.

Fence

This is simply made up from a piece of aluminium angle. Drill and bolt it to the mounting bracket, check its squareness on assembly and fix finally in position with a couple of dowels.

Tailstock bearing support

This is held initially in the three-jaw chuck and the Morse taper is roughed out to suit the tailstock taper of the machine. Turn it parallel first, and then set up a dial indicator in the toolpost bearing against the turned surface at centre height. Set the top slide over to half the included angle of the taper and check the setting by advancing the top slide by, say, an inch, and compare the indicator deflection against the calculated value. Deflection values for Morse taper sizes one, two and three are given. If a Morse taper sleeve is available, then use it to check the fit as the work progresses. Use a little high spot marking to determine whether any adjustment is necessary, but do use it sparingly. Next remove the chuck and mount the machined end in the headstock taper. The remaining

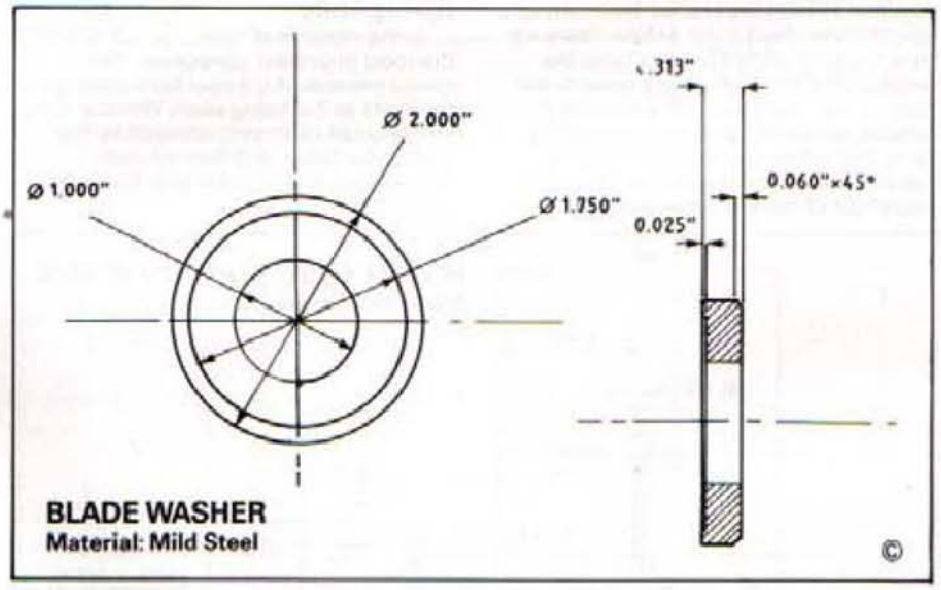

M.T. N°	L	D	T	R	T	W
1	2.287"	.480"	.375"	.187"	.203"	.343"
2	2.750"	.705"	.437"	.25"	.25"	.531"
3	3.450"	.945"	.563"	.281"	.312"	.719"

MORSE TAPER SHANK DIMENSIONS

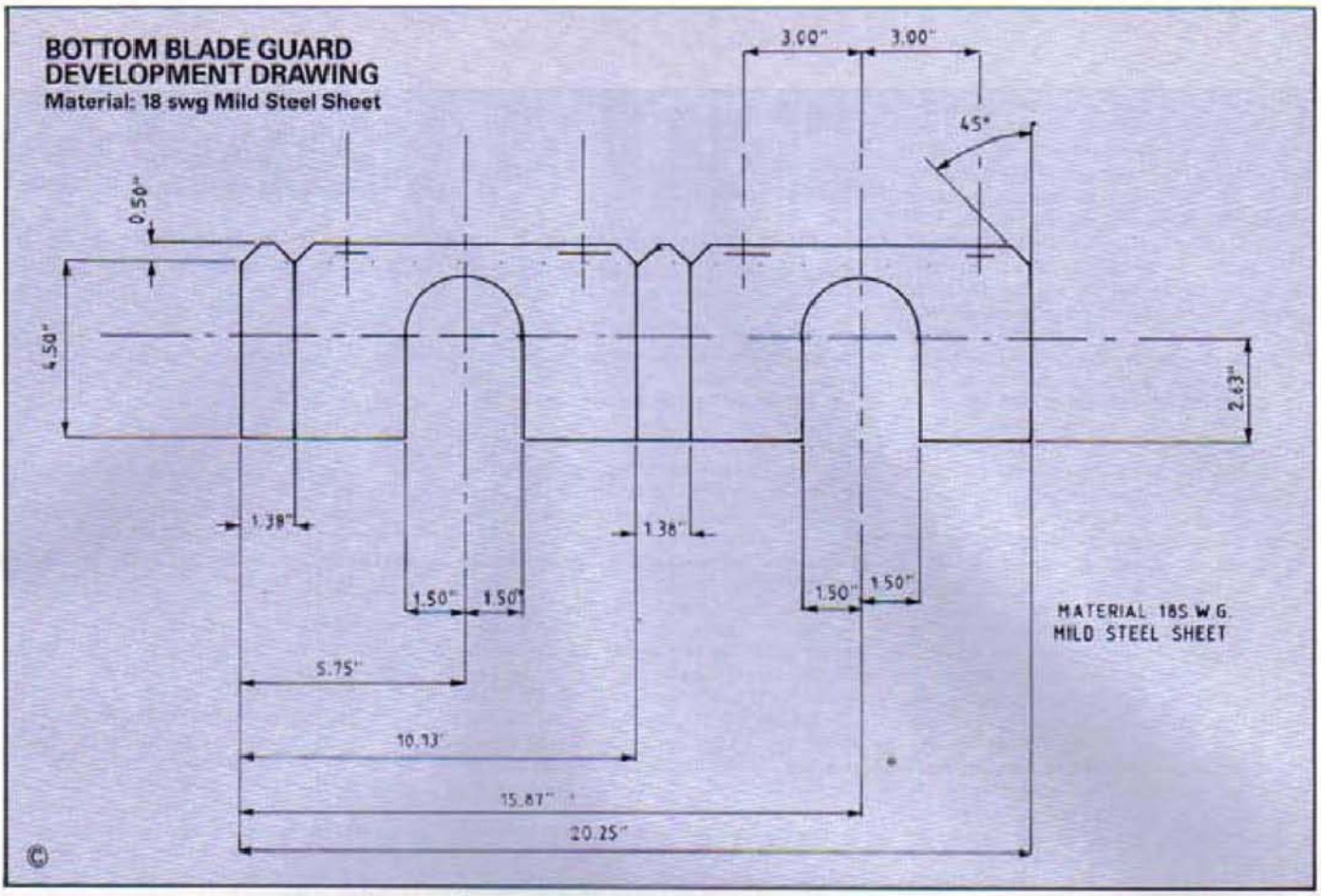

machining is carried out with the component mounted thus. Drill out as much of the waste as possible and bore out the remainder so as to make the bearing a push fit in the bore. Relieve the back of the recess to allow clearance for the inner race to turn freely without any choice of fouling and provide a small lead-in chamfer for the bearing. Lastly, bore the retaining ring groove.

The retaining ring can be easily made from a short length of welding wire, stainless if at all possible. Wind it around a piece of cylindrical bar so that when released, it will spring out to a little larger diameter than that of the groove into which

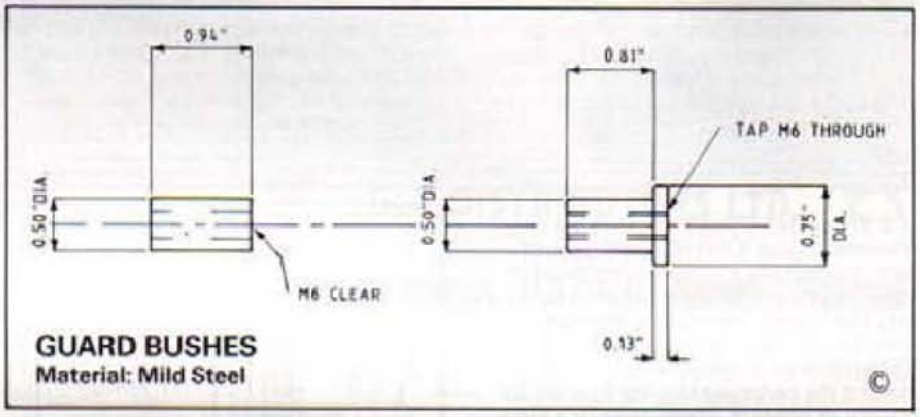

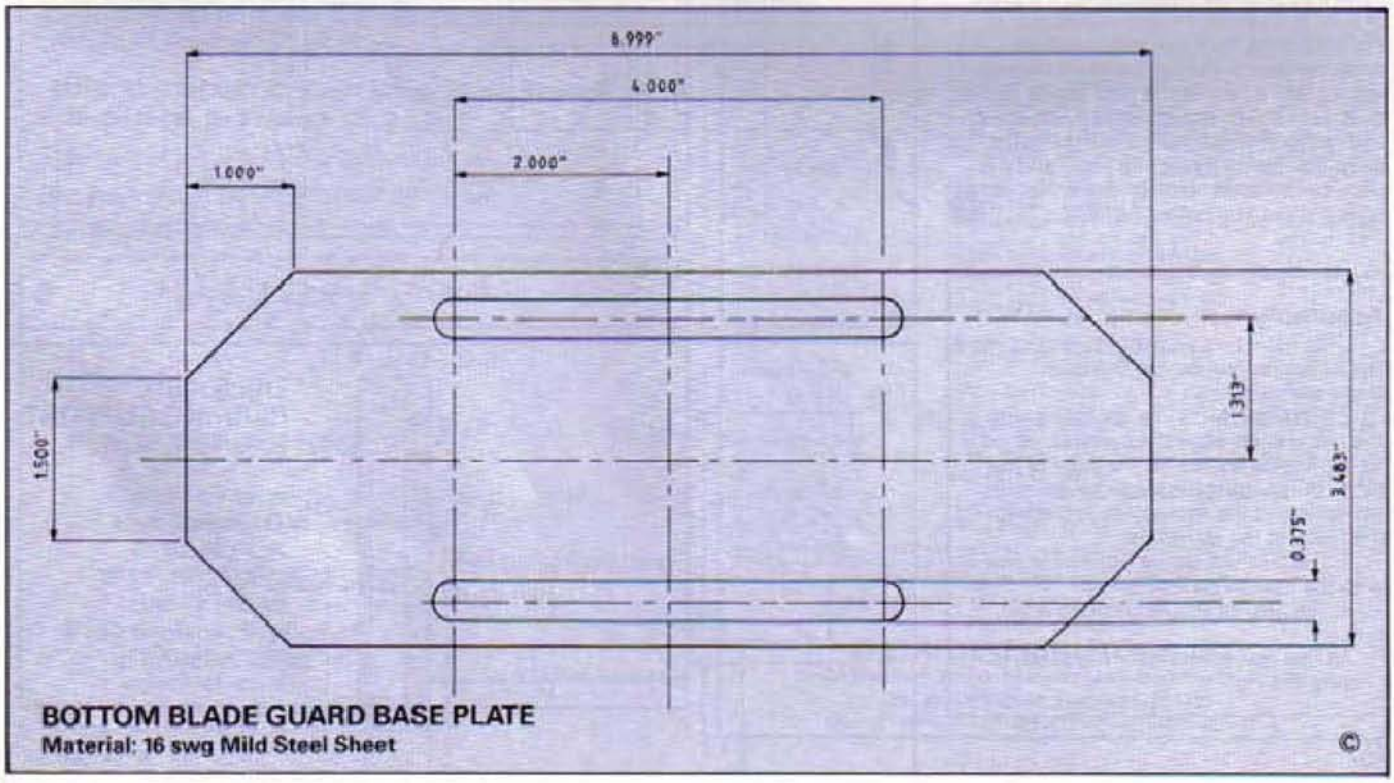

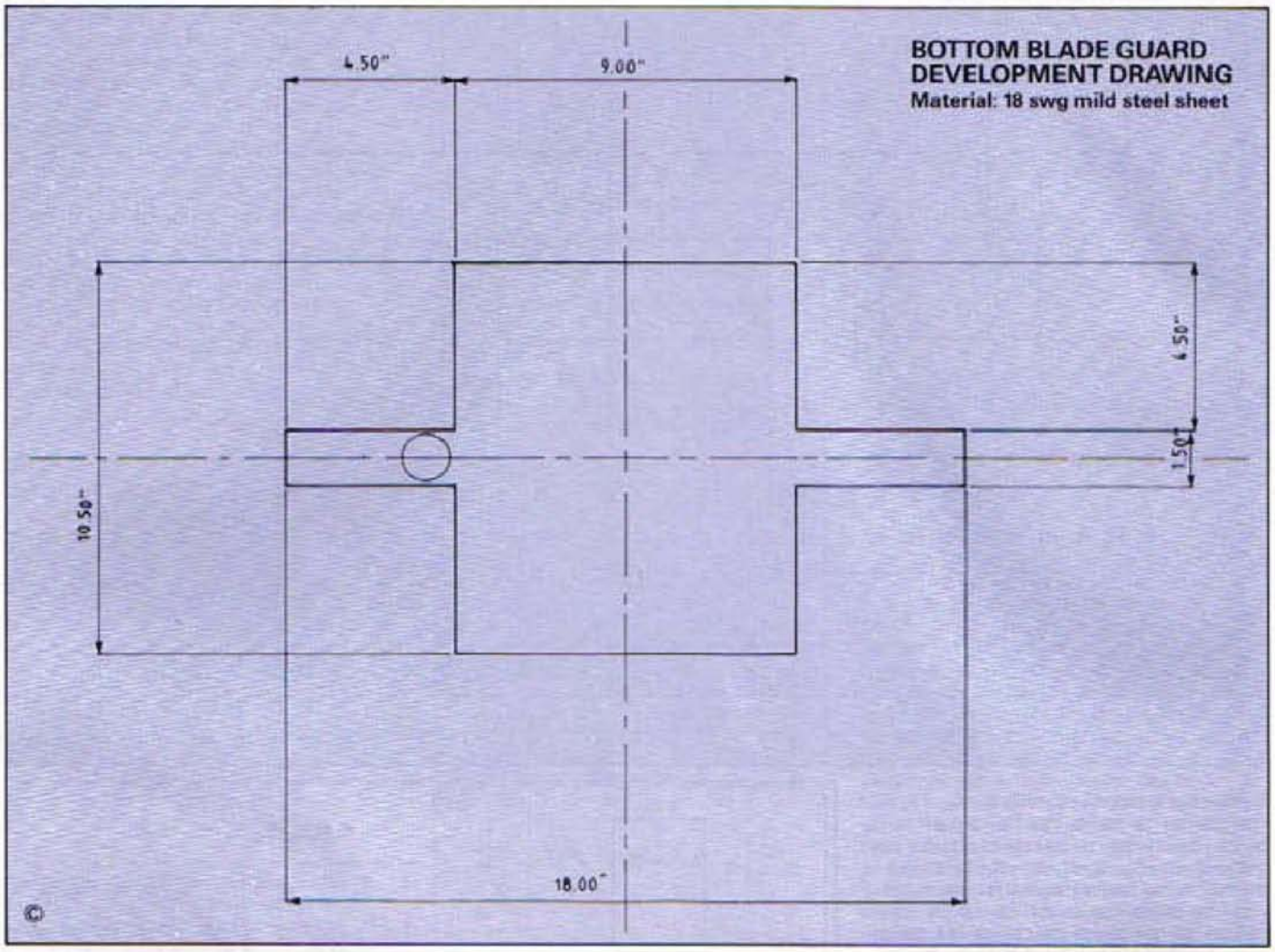

it is to be fitted. Bend one end of the ring inwards, so that it can be easily gripped with pointed pliers should it ever need to be removed. When assembling the bearing into the housing, line it up in the lead-in chamfer and tap it gently around the circumference of the outer race, working around the periphery keeping its entry as square as possible. Alternatively, if a piece of tube is available the same diameter as the outer race, then use this, it will be easier to keep the bearing square during entry. Make sure that the dust seal is on the outside of the bearing, unless it has one on both sides in which case it won't matter. Snap the retaining ring into place and the table can be assembled to check that all is as it should be before painting.

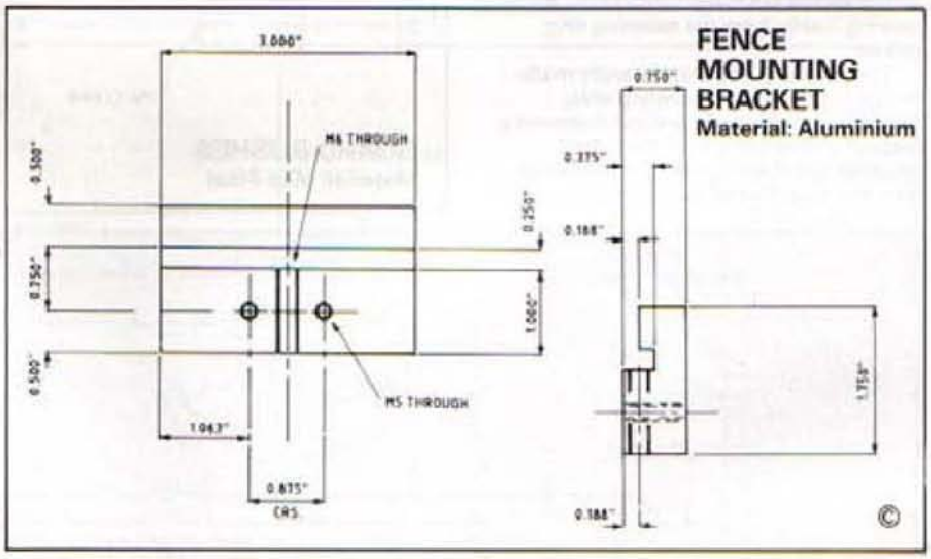

Assembly

Little need be said about setting up, as it is mainly commonsense. The most important factors are:

1. The blade MUST be set in line with the riving knife. I find the easiest method is to use a large square off the edge of the table, thus setting the blade square with the table and the riving knife in line with the blade at the same time.
2. The tailstock centre must be in line with the headstock centre.
3. The guards should be fitted at all times.

All that now remains for me to say is "happy sawing".

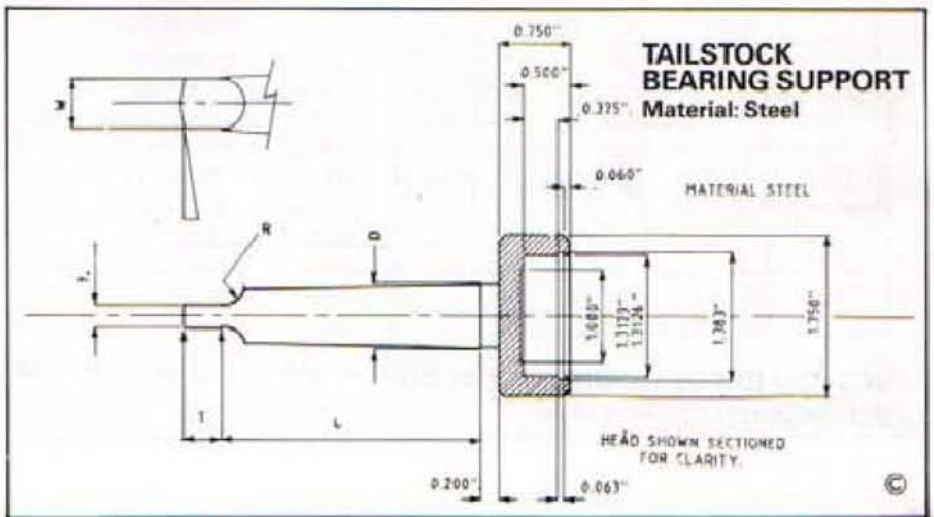

SCRIBE A LINE

Just for the record, here's Geoff Bartlett's letter reproduced from our last issue but this time in the form he intended it. Apologies for the confusion!

Three-phase electricity

Geoff Bartlett, M.R.E.G., IscT, from Birmingham has kindly written to us at length on the subject of electricity and its uses in the home workshop, offering advice and help to readers on the subject.

Congratulations on a splendid magazine, the articles are really high class. Unfortunately, I feel a little worried as did C.D. Harrington over the electrical content, particularly the safety aspect.

No-one has less time than me for the HSE and some of the ludicrous regs which are spoiling our quality of life (and giving us ulcers, probably) but an HSE inspector reading this mag would probably throw a wobbly with some justification.

Taking the uncovered points in order, the corrected description of three-phase is still misleading. A three-phase supply box would contain three live wires plus an earth; it may or may not contain a neutral (maybe these days it always does).

Between neutural (if present) and/or earth and any phase is an R.M.S. voltage of around 240 volts. Between any two phases the voltage is nearly twice this, root 3 times in fact, around 415 volts R.M.S. Neutural is normally very close to earth potential but could in a fault situation become somewhat live, so the wise man treats it with respect. Also neutral must never be connected to earth.

Mr. Brittain's hacksaw article is great but to describe a capacitor for motor starting as a round, cylindrical object is dicey! I can think of several round cylindrial objects which would make good shotgun cartridges in this application. These motor capacitors are a very special type and must be rated for the purpose – surely this should have been made clear. Also not carping, but a mains lead with a plug one end and insulated croc clips on the other is a lethal weapon. I know this is done and many a trainee has had a thick ear over it but in an article (phew). The correct way is a safeblock or, as a poorer alternative, a piece of strip connector (CHOC BAR).

D.C. motors are excellent in the workshop and Mr. Haddon Dearing is to be congratulated on his work with same. The circuit for his controllers has the advantage of simplicity and I am sure works well and if it can be obtained properly boxed with no possibility of touching anything inside (and this includes having a plastic spindle on the speed control pot) then fine. I would not however advise anyone unless they really know what they are doing to construct one from the diagram (mistakes and all). It's OK if it works first time but if it needs faultfinding you have another lethal weapon in your hands.

I admit to a strong personal dislike for non-isolated controllers and to get me to work on one needs threats, bribery and various parts of my anatomy twisting. I feel happier working on a multikilovolt power supply!

I also use D.C. motors for toolpost mill drill, small high-speed drill, gearcutting machine, milling machine and machine hacksaw. With the exception of the hacksaw these are all low voltage. The mill is a third HP Sinclair C5 motor and the others are car heater blower motors, dirt cheap. The drill will put a 0.25 in. drill through mild steel of any thickness – the drill can penetrate almost as fast as my pillar drill. The hacksaw is 200 volt but the controller up to the thyristor is transformer isolated so as long as this doesn't fail I can work on it safely should a fault occur.

I hope my remarks are taken constructively; I must have had hundreds of shocks in my working life and didn't like any of them!

Re magnetised cutters: this is only a theory but this is perhaps one of the things we notice but don't question until someone else brings it to light. I think it is due to stress in cutters or workpiece setting up eddy currents in the material, something like the reverse of magnetostriction where strong altering magnetic fields will produce minute dimensional changes in a ferrous material. If this theory has any merit, it would probably need a physicist to explain it...

"ASHDOWN Does!"

For a new range of steam locos, send S.A.E. for our list. Isle of Man Beyer Peacock, Southern Schools class London Tilbury Southend 4-4-2 tank, LSWR T9 Caledonian "Dunalister" GWR. County and Modified "Hall" Lord Nelson – all 5" gauge.

7¼" Swiss Weldenburg 0-6-0 and LMS "Duchess".

List of waterslide transfers and other supplies available by post, £1.25 cheque/P.O. to:

ASHDOWN MODELS, "Ross Cottage", Johns Cross, Robertsbridge, East Sussex TN32 5JN.

Selection of models on our shelves for sale.

See you at GUILDFORD SHOW 20/21 July.

MANUFACTURERS OF LIVE STEAM FITTINGS
Fyne Fort Fittings (Freshwater I.O.W.)

FYNE FORT FITTINGS
The Steam Fittings Specialists
Clarence Boatyard, East Cowes, I.O.W. PO32 6EZ U.K.
Axle Pumps to Whistles
sae for free list
Trade enquiries Welcomed
Tel: (0983) 293633
Access/Visa accepted.

W orry
O rdeal
R elax
K it-out . . . shop

See you at Guildford Stoke Park

Our list still free for s.a.e.

GLR DISTRIBUTORS LTD.
BUDGET PACKS OF MATERIALS 15% OFF LIST
PRICE ONE 2 FOOT LENGTH OF EACH SIZE.

SUPER VALUE **PACKS** MONEY SAVERS

SAVE 15% WITH ONE OR MORE OF OUR BUDGET PACKS. 1 TWO FOOT LENGTH OF EACH SIZE

POSTAL & PACKING CHARGES

1 Kilo	£2.65	4 Kilos	£4.25	7 Kilos	£5.15	10 Kilos	£6.15
2 Kilos	£3.25	5 Kilos	£4.45	8 Kilos	£5.52	10 - 25 Kilos	£7.50
3 Kilos	£3.95	6 Kilos	£4.95	9 Kilos	£5.85		

BMS FLATS
(A0) 1/16 × 1/16, 3/32, 1/8, 5/16, 1/2, 1, 2, 3 — 2.8 Kilos £6.58
(A1) 1/8 × 1/16, 3/32, 1/8, 5/16, 1/2, 1 — 1.5 Kilos £4.09
(A2) 3/16 × 3/16, 3/32, 1/8, 5/16, 1/2, 1 — 2.5 Kilos £4.75
(A3) 1/4 × 1/16, 3/32, 1/8, 5/16, 1/2, 1 — 3.5 Kilos £6.80
(A4) 1/4 × 1/2, 1/8, 1, 1 1/2 — 4.0 Kilos £8.18
(A5) 1/2 × 1/2, 1/8, 1, 1 1/2 — 5.0 Kilos £8.30
(A6) 1/4 × 1, 1 1/4 — 3.0 Kilos £6.52
(A7) 1/2 × 3/4, 1, 1 1/4, 1 1/2 — 7.0 Kilos £13.30

BMS ROUNDS
(B1) 1/16, 3/32, 1/8, 3/16, 1/4, 5/16, 3/8 — 1.0 Kilos £2.43
(B2) 1/4, 5/16, 3/8, 1/2, 3/4, 5/8, 3/8 — 3.5 Kilos £5.68
(B3) 3/8, 1/2, 3/4, 1 — 7.0 Kilos £9.58
(B4) Prec. Gd. 1/8, 3/32, 1/16, 1/8, 3/16, 1/4, 3/8 — 2.5 Kilos £7.20

BMS HEXAGONS
(C1) 3/16, 1/8, 1/4, 3/16, 3/16, 3/8 — 1.5 Kilos £3.20
(C2) 1/4, 3/32, 3/16, 3/8, 1/2, 3/8 — 4.0 Kilos £6.73

BMS SQUARES
(D1) 1/8, 3/32, 1/4, 3/16, 3/8 — 1.5 Kilos £2.62
(D2) 1/8, 1/8, 3/8, 3/8 — 4.5 Kilos £6.18

BRASS ROUNDS
(E1) 1/8, 3/32, 1/8, 3/16, 3/8, 1/2 — 2.0 Kilos £8.13
(E2) 1/4, 3/32, 3/16, 1/8, 3/16, 3/16, 3/8 — 3.0 Kilos £12.26

BRASS SQUARES
(F1) 1/8, 3/32, 1/4, 3/16, 3/8 — 1.5 Kilos £6.09
(F2) 1/4, 3/32, 3/16, 1/8, 1/2 — 3.0 Kilos £14.12

BRASS HEXAGONS
(G1) 1/8, 3/32, 3/16, 1/8, 1/4, 3/16, 3/8 — 1.5 Kilos £6.20
(G2) 1/4, 3/32, 3/16, 3/8, 1/8, 1/2, 3/8 — 4.0 Kilos £16.72

BRASS ANGLE
(H1) 1/8 × 1/8, 1/16 – 3/32 × 3/32 × 1/16, 3/8 × 3/8, 1/8 – 1/8 × 1/8 × 1/8 — 0.6 Kilos £5.58
(H2) 3/16 × 3/16 × 1/16 – 3/8 × 3/8 × 1/16, 1/2 × 1/2 × 1/8 – 3/8 × 3/8 × 1/8 — 1.5 Kilos £10.15

COPPER TUBE
(J1) 1/16, 3/32, 1/8, 3/16 — 0.3 Kilos £3.04
(J2) 3/16, 1/8, 1/4, 3/16 — 0.5 Kilos £4.60

STAINLESS STEEL ROUNDS EN58AM F/C
(K1) 1/16, 3/32, 1/8, 3/32, 3/16, 3/32, 1/8 — 0.6 Kilos £7.57
(K2) 3/16, 1/8, 1/4, 3/16, 3/8, 3/16, 1/2 — 2.5 Kilos £17.98

STAINLESS STEEL HEXAGONS EN58AM F/C
(L1) .118, .152, .187, .193, .220 — 0.4 Kilos £5.87
(L2) .248, .282, .324 — 0.8 Kilos £7.27

BA HEXAGON BRASS
(M1) .152, .172, .193, .220, .248, .282, .324 — 2.5 Kilos £7.00

BA HEXAGONS STEEL
(M2) 152, 172, 193, 220, 248, 282, 324 — 1.5 Kilos £3.15

BRASS FLATS
(N1) 1/4 × 1/8, 1/8, 1/4, 1 — 1.0 Kilos £5.80
(N2) 3/32 × 1/8, 1/8, 1/2, 1 — 1.0 Kilos £6.70
(N3) 1/4 × 1/8, 1/8, 1/2, 1/4, 1 — 1.5 Kilos £11.20
(N4) 3/16 × 1/8, 1/8, 1/2, 1/8, 1 — 2.0 Kilos £16.06
(N5) 1/4 × 1/8, 1/8, 1/4, 1 — 3.0 Kilos 18.76

ALUMINIUM ROUNDS F/C
(P1) 3/16, 1/8, 3/16, 3/8, 1/16, 1/2 — 0.5 Kilos £6.47
(P2) 3/8, 3/4, 1 — 1.8 Kilos £11.78

PHOSPHOR BRONZE ROUNDS
(Q1) 1/8, 3/32, 3/16, 1/4 — 0.4 Kilos £6.37
(Q2) 3/16, 1/8, 1/4 — 1.2 Kilos £16.34

PLEASE NOTE WEIGHTS QUOTED ABOVE ARE APPROXIMATE AND SHOULD BE ADDED TOGETHER FOR USE AS A GUIDE TO POST & PACKING CHARGE WHEN BUYING METAL PACKS.

SEND FOR OUR 1991 COMPREHENSIVE CATALOGUE OF MATERIALS AND TOOLING FREE OF CHARGE.

G.L.R. DISTRIBUTORS LTD.
Great Northern Works, Hartham Lane, Hertford SG14 1QN
Tel: (0992) 552962 Fax: (0992) 551726
Open all week and Saturday morning. Callers welcome.

A CAM-

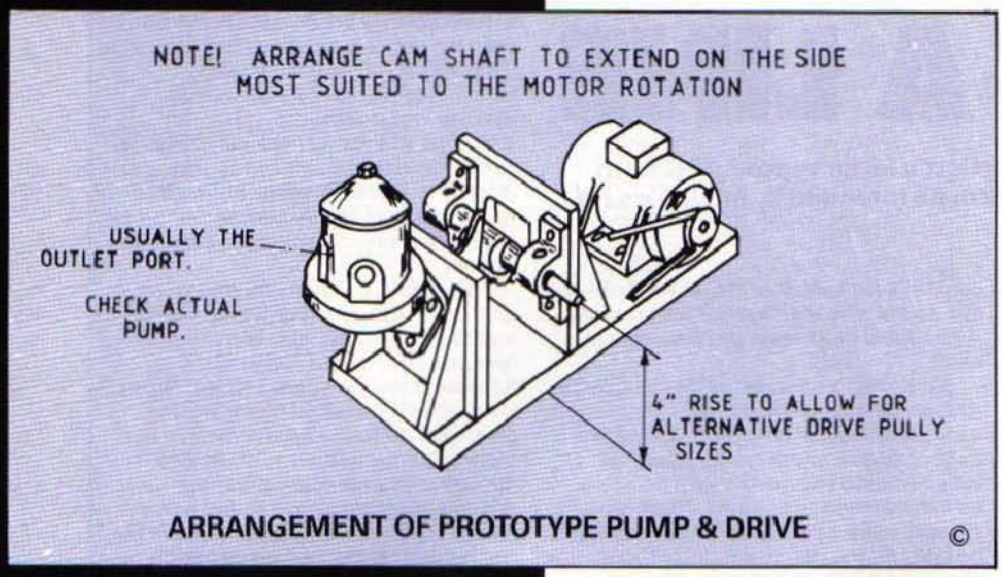

ARRANGEMENT OF PROTOTYPE PUMP & DRIVE ©

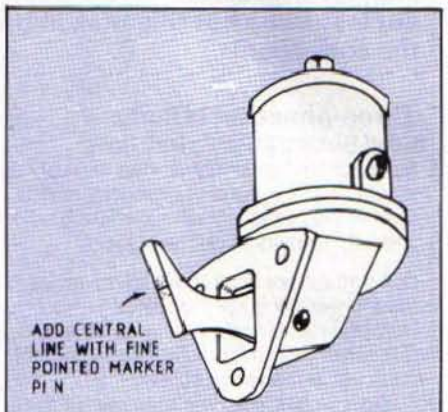

TYPICAL MECHANICAL FUEL PUMP ©

Brian Taylor will be remembered by readers for his delightful and amusing article 'Torque About Flea Power'. In this one he describes a useful and cheap pump which can be used as a suds pump for those wishing to have a continuous flow of coolant to their work on the lathe or milling machine

First, a look at the pump itself: the often over-looked motor car petrol pump. Electrical or mechanical, they are sturdy and reliable; designed to be fitted and forgotten. Although new units abound, their rugged construction favours model engineers; breaker's yards offer them at low cost and, should spares be needed, they are available nationwide.

For those unfamiliar with fuel pumps, a few comments may be appropriate. Simple yet ingenious, they depart from conventional design on two counts. Not only do they provide positive suction together with an infinitely variable through-put to meet an engine's ever changing throttle settings, they automatically suspend pumping action until demand elicits further response; features which may be exploited to advantage by model engineers. In short, a design worthy of consideration.

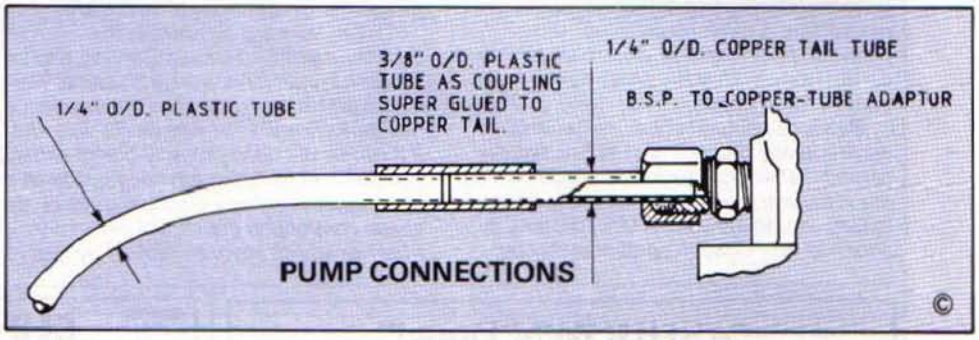

PUMP CONNECTIONS ©

Fuel pump design

Via a rocker-lever, the cam's first full rotation applies a downward pull on a spring loaded diaphragm (displacing it a little short of its distortion limit) thus pulling fuel into a chamber behind it. An input-line non-return valve prevents the spring from returning the diaphragm, so both it and its attached rocker-lever remain held at the limit of cam-lift, subsequent cam rotations being ineffective.

The condition persists until fuel must flow to satisfy carburettor thirst, whereupon diaphragm return-spring pressure urges fuel via an output non-return valve to the car's 'burettor'. Fuel delivery permits a fractional movement of both diaphragm and lever. Fractional it may be, but lever movement is immediately countered by cam action which 'taps' it back to peak cam-lift. Via the rocker lever all such taps become 'tugs' at the diaphragm. In that manner, a fuel pump's diaphragm is not subjected to constant flexing and counter-flexing between extremes, but is maintained distorted by a multitude of tugs as fuel is used. Being designed to operate from an engine's cam-shaft, they happily withstand speeds up to and in excess of 3000 rpm.

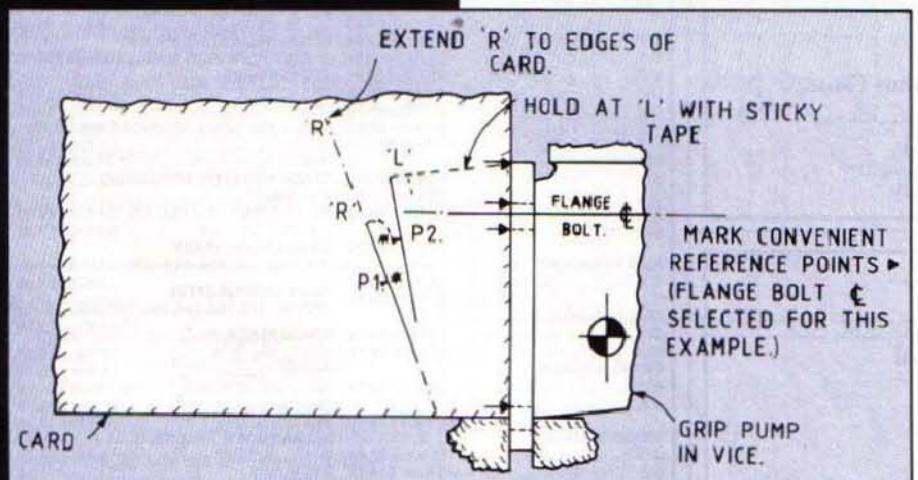

STEP 1

RELATE PUMP REFERENCE POINT TO FOLLOWER IN RELAXED & LIFTED POSITIONS.

MARK OUTLINE OF CAM FOLLOWER IN 'RELAXED' POSITION-'R' & EXTREME LIFTED POSITION 'L'
* SPOT POSITIONS OF PEN MARKS P1-P2. (SEE TEXT)

©

Inlet and outlet

Pump details differ between manufacturers, as do sizes throughout the range. A prize specimen may have ports complete with adaptors for copper tube or they may be lying on scrap-yard shelves. If not try a local plumber. Prizes respond to a strip-down and thorough cleaning; there is no better way by which to learn 'how things tick'.

Two lightly spring-loaded disc type non-return valves are associated with the inlet and outlet ports. Care should be taken to replace them in their respective positions. In addition, two circular fine-mesh fuel

DRIVEN PUMP UNIT

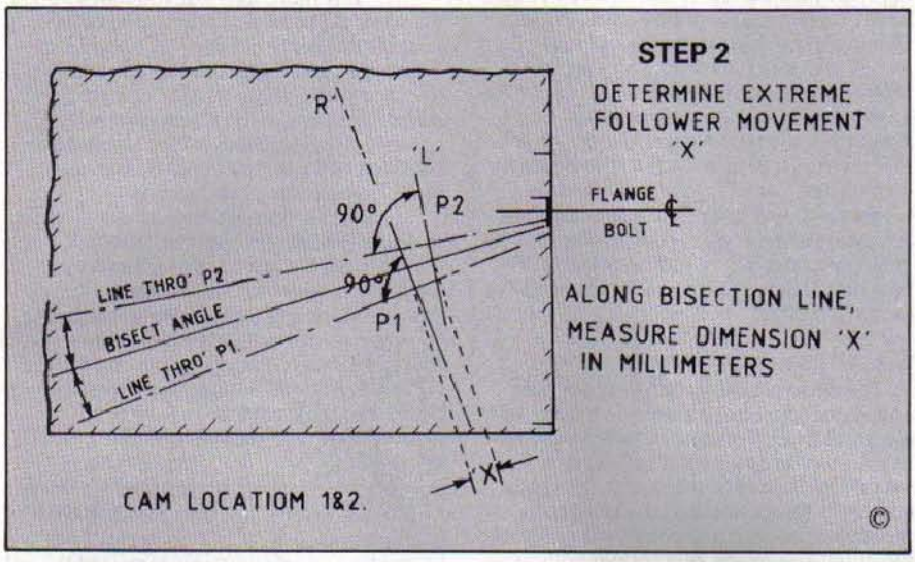

QUICK TIP

No matter how careful one is, from time to time a tap will stick in the material in which it is being used. In theory, a good tapping compound will prevent this from happening but that is not always the case. Once the tap has struck and even minute reversing operations will not free it, then try a quick spray of WD 40 – this almost always does the trick! It is really only an extension of an old idea, used by engineers, of mixing carbon tetrachloride with thin oil and allowing the mixture to soak in. WD 40 is particularly useful where taps have seized in aluminium or cast iron. It also makes a useful cutting lubricant when machining.

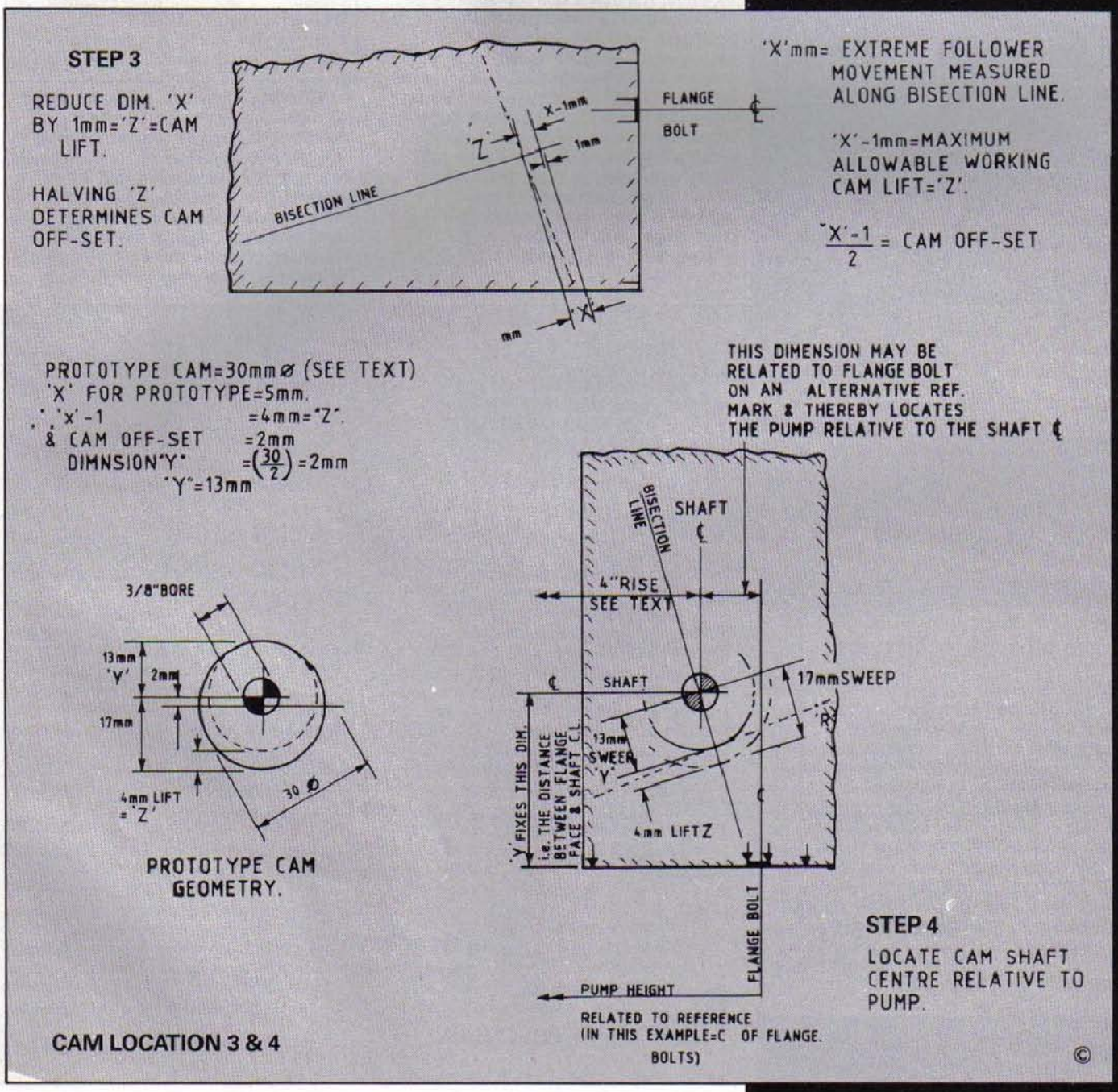

filters lie in the inlet and outlet zones, often secured by snap-rings. They serve no purpose in the project and may be omitted. New or otherwise, arrange for both ports (usually tapped a BSP size) to terminate as ¼ in. or 8 mm plain 'tails' so that flexible plastic tube may be added.

The cams and cam followers

Essential steps for locating a cam-shaft relative to a pump's cam-follower are set out in detail; readily adaptable to the pump selected.

Be it new or a prize, rocker-lever movement must not exceed the pump's designed limits, so it is necessary to accurately define them. First examine the follower's working face. If new, a fine line (P) must be drawn across its centre with a sharp pointed marker-pen. Used versions show a bright patch where it contacted the original engine's cam. It, too, requires a fine pen-line (P), drawn across the bright area's mid-point.

Proceed by gripping the flange vertically in vice jaws. Using an old greetings card, rest its long edge on the jaw, its vertical edge square against the pump flange. With a sharp pencil, mark positions of the flange bolt-holes as reference points. Continue by carefully tracing the cam follower's working face in its relaxed position (R). 'Spot' the position of pen-line, P1. Move the follower to its maximum lift position, secure with sticky tape, re-align the card to its original position against flange bolt-hole references and re-trace the follower in its lifted position (L), again spotting the pen-line at P2.

Leave the flange in the vice (it may be necessary to verify something), tape the card to drawing board and lengthen 'R' to card edges. Next draw lengthy lines perpendicular to 'R' and 'L', passing through origins P1 and P2.

Bisect the resulting angle and draw the bisection line which will intersect both the relaxed (R) and lifted (L) outlines of the follower's face. Carefully determine in millimetres, distance 'X' between (L) and (R) when measured along the bisection line. Dimension 'X' represents the ultimate extent of diaphragm distortion and, in the following manner, must be avoided.

Reduce 'X' by one millimetre to establish maximum allowable cam lift, ie X−1=Zmm. It in turn leads to the figure for cam off-set, namely: 1/2×Z millimetres.

Retain the card, its data is required later. For expediency, construction of the simple yet highly satisfactory prototype utilised proprietary items for the self-contained motorised drive.

Electrics and safety

The close proximity of mains voltages and water constitutes a serious hazard. All electrical wiring must be installed with safety in mind and a solid connection established between the pump, the motor and earth. Motor and switch connections must be arranged to prevent the ingress of moisture. The mains lead should preferably be plugged into a socket protected by a Residual Current Circuit Breaker (RCCB) or, as they were previously called, an Earth Leakage Circuit Breaker (ELCB). In any event the circuit **MUST** be protected by a 2 amp fuse in the mains plug. The on/off switch should ideally be a double pole type in order to fully isolate the circuit when off. Finally, with safety in mind, the drive should be shrouded by a belt guard – **before** little fingers are trapped. Take precautions – play for safety.

Powered by a ¼ hp motor, a 3:1 reduction via 1½ and 4½ in. 'M' section Vee pulleys gave an adequate 500 rpm camshaft speed. The 4½ in. driven pulley and the pump's shape were taken into account when selecting camshaft centre height which, allowing for alternative drive pulley sizes, was made 4 inch overall rise.

The cam was made from 30 mm diameter stock for no better reason than a suitable piece of mild steel lay handy. Rotating in two ⅜ in. bore Picador bearings, the cam, fixed with a socket head grub screw, was sandwiched between two spacers. Brass washers butted against the bearings and with fractional clearance, provided endwise shaft location.

The shaft's journal bearings were bolted to one of two similar vertical plywood panels, both discussed later. Checks by 'card and outline' for the prototype indicated ultimate rocker-lever movement 'X' was 5 mm. In accordance with the formula it was reduced to 4 mm working lift which, in turn, required the cam to be bored 2 mm off-centre.

Prototype cam geometry thereby showed:

Cam diameter	−30 mm
Cam radius	−15 mm
Off-set	− 2 mm
Producing:	
Maximum sweep radius	−17 mm
Minimum sweep radius	−13 mm (Y)

Returning to the card, minimum radius (Y), measured off along the angle's bisection line, fixed a point 13 mm away from the relaxed position (R) of the follower, thus identifying camshaft centre. A line perpendicular to the flange face and passing through the centre, related camshaft centre-height to the flange-bolt references, originally marked on the card. Furthermore, measuring along the line

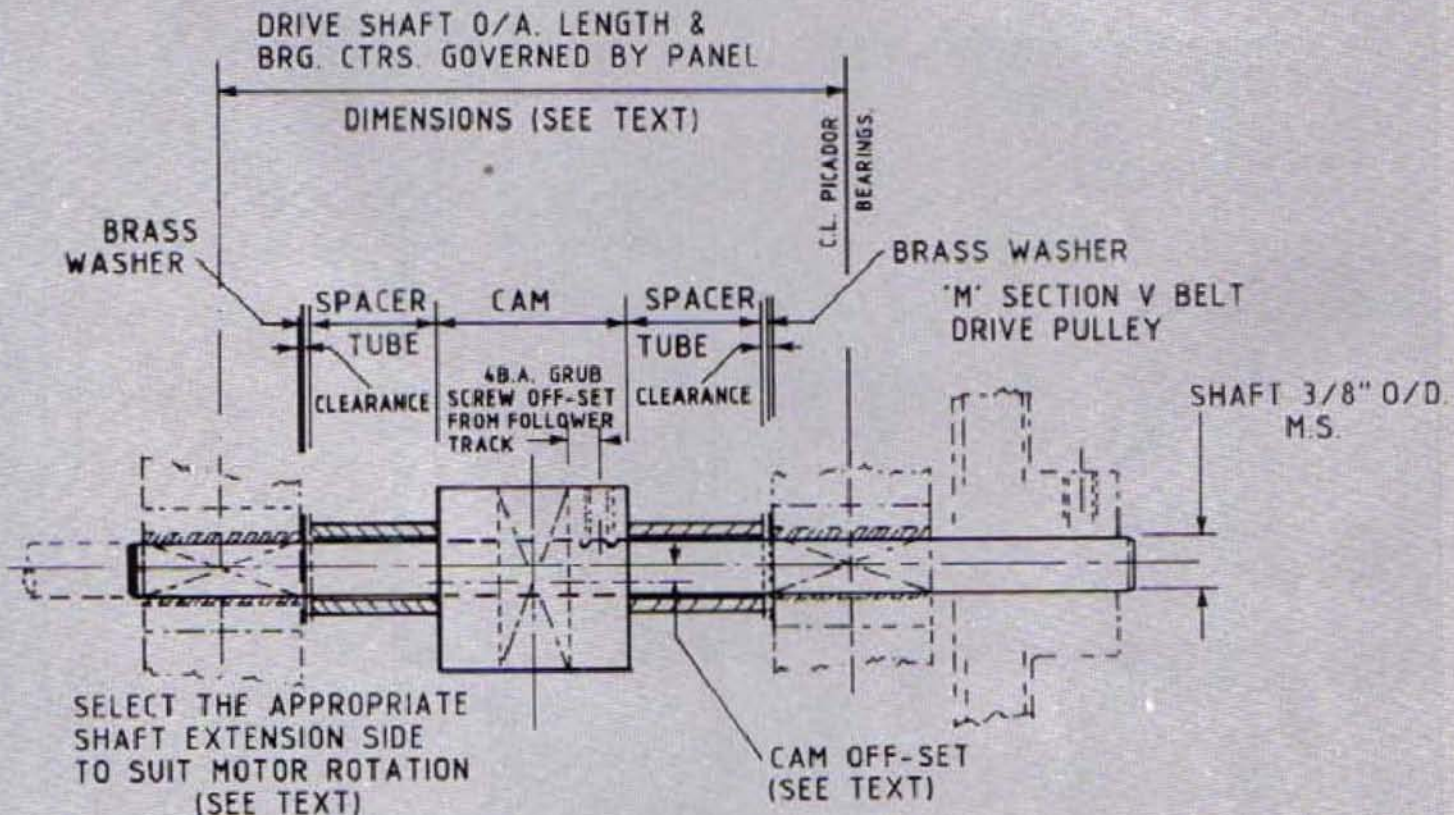

CAM SHAFT ASSEMBLY

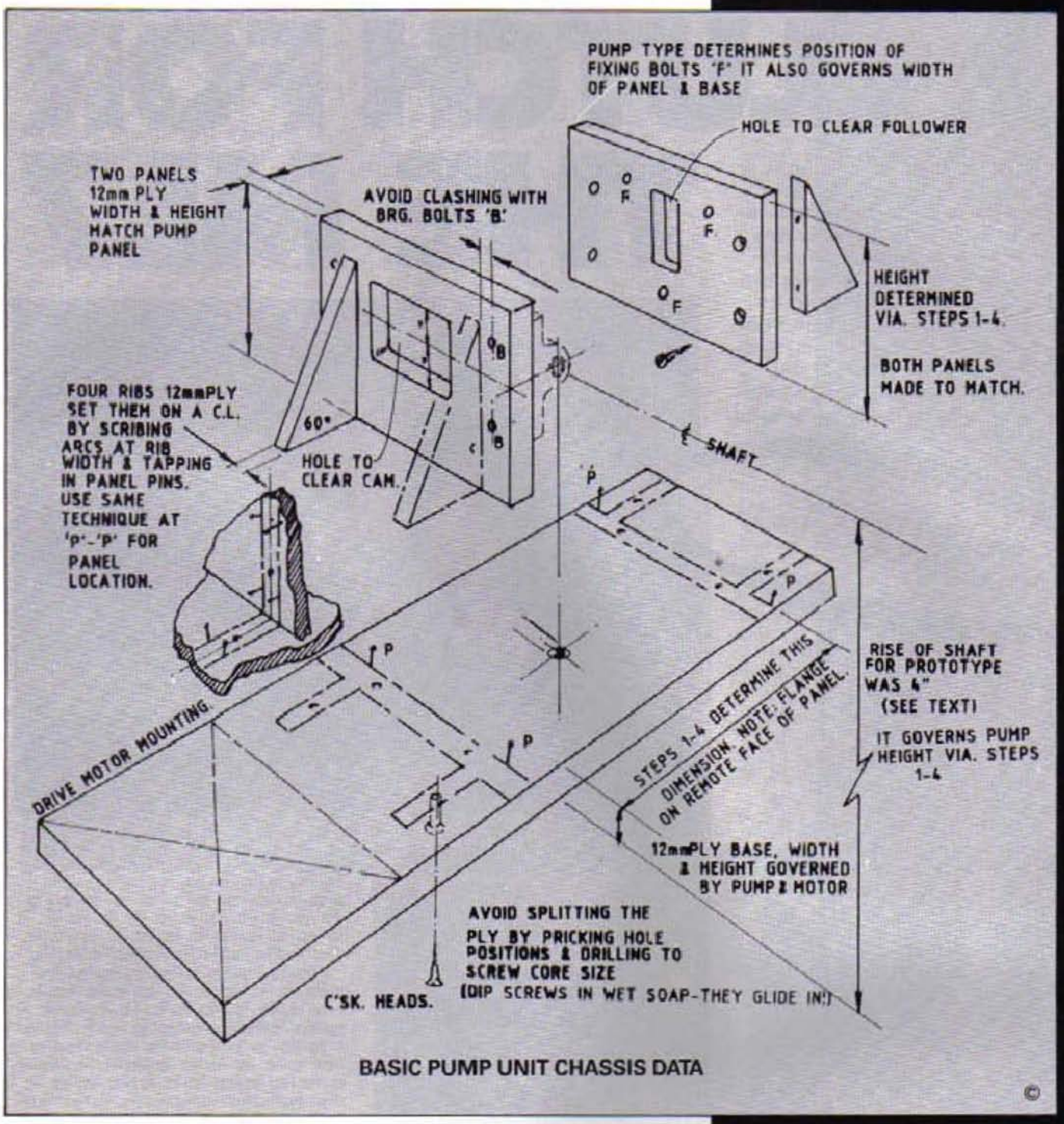

BASIC PUMP UNIT CHASSIS DATA

from the flange provided the dimension between pump-flange and shaft centre.

Having established the pump's height and distance relative to the 4 inch rise of the shaft, the minimum height requirements for a pump support-panel were to hand. It was decided to match both panels for size; provisionally allowing height to be governed by the shaft panel and width by the pump panel.

Mounting the unit

Baseboard width and length remained to be defined; both dimensions influenced by the physical size and position of the motor-base 'foot-print'. In the case of the prototype, the footprint lay within the provisional width chosen for the bearing and pump panels, so base-width matched them. Overall length was determined from the motor with the drive-belt in place.

The shaft panel contained a rectangular hole to clear cam-lobe sweep while two triangular ribs braced it to withstand belt tension and cam reaction thrust. Due to vertical mounting, the existing oil-holes lay horizontal, so both bearings were carefully re-drilled vertically with a flat bottom drill to expose the O/D of the oilite bush.

Like the bearing panel, two triangular ribs braced the pump panel against cam thrust, while a slot allowed the follower to pass through. Both panels were glued and screwed to the stout ply baseboard. Cam action 'trailed', ie. it wiped the follower from heel towards toe.

Fuel pump suction is positive and self-priming whereas delivery relies on the diaphragm return spring; adequate for urging fuel from pump to carburettor, but imposing a restriction on 'above-pump' delivery level.

QUICK TIP

When silver soldering or brazing, particularly where overall heating is being used as in the case of a propane torch, it is difficult to prevent the spelter from running all over the place and making an unsightly mess. Whilst, to some extent, this can be controlled by marking round the area with an ordinary lead pencil, the heat will sometimes overcome even this. An alternative that never seems to fail is to use typists' correction fluid such as Tippex. The flux and spelter will not pass this barrier and the barrier itself can take all the heat that is applied.

A CLUTCH FOR THE ML7

The use of a clutch on a lathe is most desirable. In this article Alan Buttolph describes how to make a clutch which operates freely and positively. Although the measurements given apply to the Myford ML7 there is no reason why the idea cannot be adapted to any lathe fitted with a countershaft. A trial of the methods used produced a fully operational clutch in a weekend.

YOUR FULL SIZE PULLOUT DRAWINGS

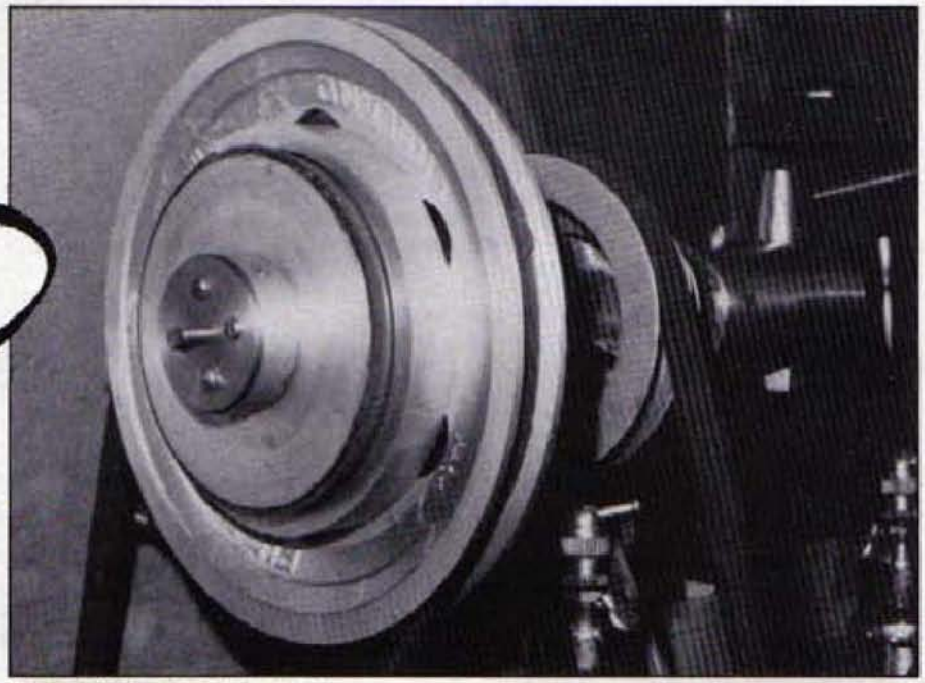

The clutch parts, disengaged.

If you only stop to think about such trivial matters it is obvious that, in producing even the simplest item on a lathe, the main spindle must be stopped and restarted several times. It is the sort of thing that we do with hardly a thought and yet, if stopping and starting entails switching the driving motor on and off every time, we are really imposing very unfair conditions on the motor, not to mention the switch. Unless we have a motor and switchgear specially designed for such a repetitive 'duty cycle' – which I venture to suggest is most improbable – then commonsense suggests that the motor be left free to run once it is started and that the lathe spindle be controlled otherwise.

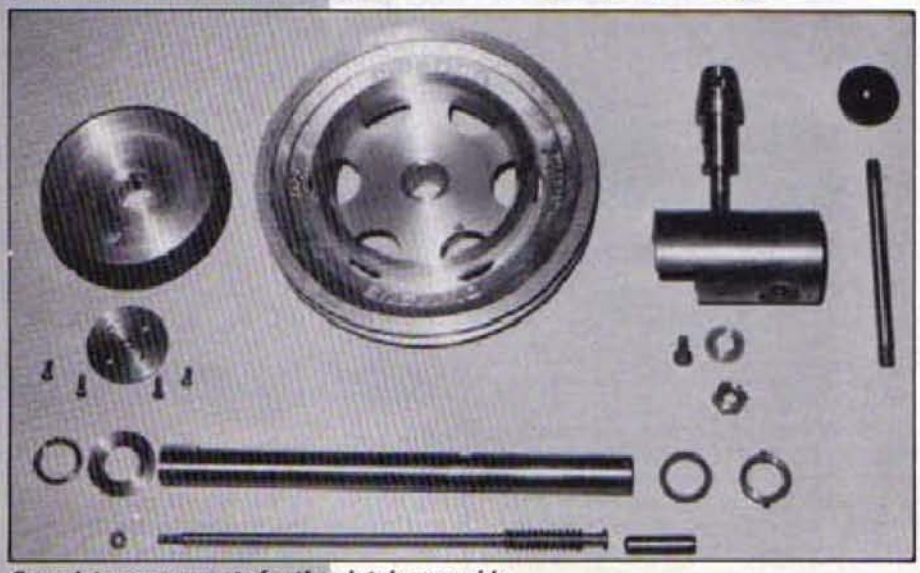

Complete components for the clutch assembly.

In the days of line shafting serving many machines we slipped the overhead (flat) driving belt from the idler to the driving pulley with no necessity to give a thought to the driving motor. Few amateurs can still be using this sort of set-up now although it is simple and effective, but requires a fair amount of space to accommodate. In these days of limited space, the self-contained lathe with integral drive has a lot to commend it and a hand-operated clutch between the driving motor and the lathe spindle is a real asset.

When I first tackled the idea of fitting such a clutch to my Myford ML7 the preliminary sketches were so encouraging that I decided to design and make my own clutch. The ML7 lends itself most effectively to such a project which, with average care and the materials available to the amateur, is well worth the time and very small cost involved. Other lathes will also be adaptable for a clutch of this type.

The simplest and, for our purpose, the most effective type of clutch is the friction cone clutch. This consists of two conical parts, one male, one female, which are held in contact by axial thrust to rotate together by virtue of the friction between the conical surfaces. The frictional grip is smoothly engaged and disengaged by making one of the mating surfaces of a pliant material such as leather.

Materials

You can see from **Figure 1** what the general set-up is; this shows the two parts of the clutch when engaged. The two parts are of aluminium or light alloy, which is still available, I trust, from our usual suppliers in the rather large diameter required here, but the available thickness is usually under an inch. So our moving half-clutch is constructed with a separate boss. If you have the necessary thickness of material available, of course, it can be made from one solid blank. The other components are from materials which I can well believe are easily to hand or to be obtained. These are nearly all mild steel, with a short length of brass and about a dozen screws. Finally, you will need to buy or make a new 7 in. dia. driving pulley. (With some ingenuity you might be able to use the existing

driving pulley. It would need very careful contriving, otherwise at some stage you are without an operational lathe for essential turning! It is simpler to have a new pulley available.)

Keeping the lathe in service

We soon run up against the obvious question – "how do we make and fit a new drive for the lathe while keeping the lathe operational?" We solve this by planning the operation carefully and by replacing the existing countershaft and driving pulley with new ones. I suggest that you first check the various dimensions of your own countershaft bearing bracket to see if they agree, more or less, with those that are shown in **Figure 2**. They probably will, but any normal variation can easily be accommodated because the design dimensions given here can be adapted to particular needs provided that all inter-dependent dimensions are given attention.

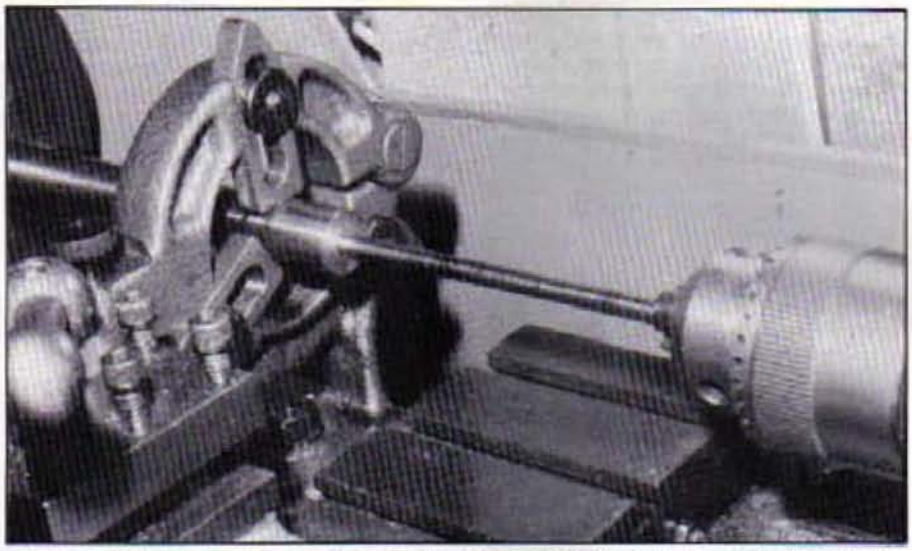

A long drill, improvised from silver steel, will complete the hole down the length of the shaft.

The countershaft

Start with the new countershaft which has to replace the existing one. First trim it to length, face and centre-drill the ends then turn it between centres to the finished diameter of the old countershaft – $\frac{3}{8}$ in., I assume. You may be fortunate enough to have a suitable piece of bright drawn mild steel which is true to size, in which case use it; but you must ensure that the ends are centred quite true. The next job is to put a $\frac{13}{32}$ in. hole down the axis to a depth of about $2\frac{3}{4}$ in. A fixed steady is a great help here as we now have to extend this hole $\frac{1}{4}$ in. diameter for the remaining length of the shaft. You will probably find that your standard length of $\frac{1}{4}$ in. diameter drill will not be sufficient to get half-way along the shaft, so, having drilled as far as you can into the shaft from each end, you now proceed to make a 'flat' drill from a length of $\frac{1}{4}$ in. diameter silver steel.

If you have not improvised this type of drill before, it is quite straightforward. File two parallel flats on one end of the silver steel for a length of about one inch so that you reduce the end to a symmetrical flat about 0.1 in. thick. File the end to a 120 deg. point just as in a standard twist drill, and 'relieve' the cutting edges and also the sides of the flat, very lightly, back from behind the cutting edges. Harden and temper the cutting point and finally grind or stone the cutting edges to be reasonably sharp. With this drill you can finish off the hole to be $\frac{1}{4}$ in. diameter for the remainder of the length. The holes are not too critical for size within a few thousandths of an inch but should be as straight as you can achieve, so don't push the drill too hard!

The craftsmen who made sporting guns and rifles had to get really true straight holes up the barrels, which they achieved by pulling a D-bit of correct size through. The initial hole to permit threading of the D-bit shank through the barrel was drilled undersized and as straight as practicable. Final honing and adjustment gave a perfect bore.

Now finish off the countershaft by filing or machining two flats to accept the grub screws in the cone pulley.

The clutch boss

Strategically, the next piece to be made is the separate boss for the mating half of the clutch. This is turned, bored and threaded and trimmed to length in one setting, the bore being a good sliding fit on the new countershaft. Leave the keyway for later. The two halves of the clutch are not too large for a four-jaw chuck. The sliding part is part-machined first. Leaving the outside diameter, face both sides, face to length, recess $\frac{1}{8}$ in. deep and bore to core diameter for the thread. Now cut the thread which should be a good fit to the boss already made. All being well, you can now assemble the boss, fixing it firmly with adhesive on the cleaned threads. Caution! Do assemble the boss from the side opposite to the recess.

Set the top-slide to about $12\frac{1}{2}$ deg. clockwise and retain this setting until all the work on the cone angles is finished. It is advisable to complete the sliding part so, holding it in the chuck by the boss, set this up true to the bore and the face. Machine the conical surface to the dimensions shown.

Clutch material

I covered the conical face of the sliding part with some old leather belting and the dimensions shown are dictated by the thickness of the finished facing. The facing material need not be available in one continuous piece; you can use any available source of leather, which must be reasonably thick. Old belts, thick garden gloves or even discarded shoes can be cut into suitable strips, sufficient to cover the circumference of the moving half-clutch. The thicker the better, up to about $\frac{1}{8}$ in. thick. It will all be machined to uniform thickness later on. It is secured to the metal by a good epoxy adhesive. When this is quite secure, this half of the clutch is set up truly concentric in the lathe and the working face of the leather is machined true with a sharp tool.

Now chuck the blank for the fixed half-clutch, face both sides and bore out to about $3\frac{1}{2}$ in. Using this internal diameter by which to hold it in the reversed chuck jaws, finish turn the outside diameter. It is a help here to anticipate the six tapped securing holes so with a sharp pointed tool, scribe a circle $4\frac{1}{8}$ in. diameter on one face.

Now rechuck, holding it by the finished outside diameter, which must now run true. The scribed circle should be on the inside, next to the chuck face. Machine the conical mating surface and as you get near to size, check occasionaly by offering up the mating face of the finished sliding half. Bear in mind that this must fit tightly into the fixed half and yet stand proud about $\frac{1}{8}$ to $\frac{3}{16}$ in.

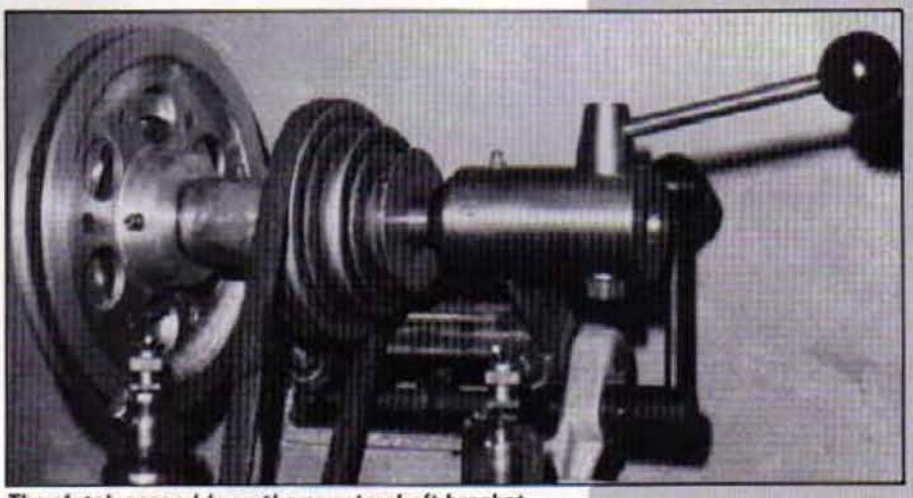

The clutch assembly on the countershaft bracket.

Drive pulley

You can now set up the new driving pulley, probably on the faceplate, so that the bore runs true. You will probably find that the boss is all to one side of the plane of the pulley. This must be machined on the

face to give a total thickness of $\frac{1}{4}$ in. for the boss. The diameter of the boss can be left 'as bought'. The bore is now opened out to 1 in. diameter to accept the brass bush. While it is set up, you can lightly score the pitch circle for the securing screws. Remove the pulley from the lathe, mark out and drill the six holes for the securing screws.

The brass or bronze bush for the pulley can then be turned to size. You may find it convenient to finish turn the outside diameter to be a firm press fit in the pulley but to leave the inside diameter to be about two hundredths of an inch small. After fitting the bush to the pulley, you can mount the pulley on the faceplate so that the bore of the bush runs true. Finish the bore of the bush so that the countershaft is a nice running fit. An oil hole angled through boss and bush is advisable and in this connection you will most probably find that your new driving pulley comes with a suitable hole already in the boss, threaded and complete with grub screw. Just remove the grub screw and continue the hole through to the inside of the bush. A reasonable improvement here is to fit a grease nipple – as the driving pulley, when installed, will not be easily accessible for frequent oiling.

The thrust block.

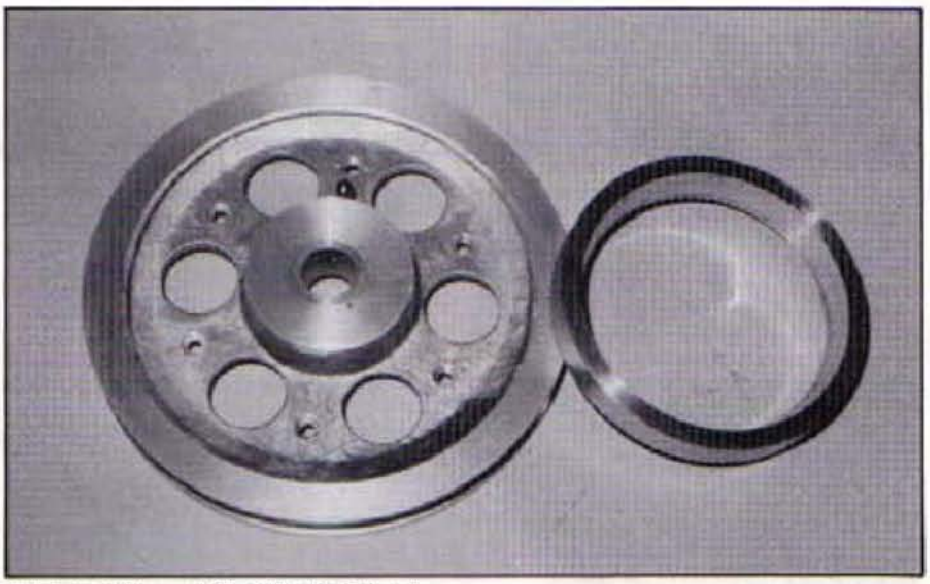

Driving pulley and 'fixed' half of clutch.

four holes in the clutch through the corresponding holes in the pulley. These are tapped and the screws assembled. If you now put the driving shaft between centres with the pulley mounted on it, you can check for concentricity.

You can now cut the keyways in the end of the driving shaft and in the boss of the clutch. The key must be firmly secured to the shaft. The keyway in the boss must be a nice sliding fit over the keyed shaft. A thin steel washer limits the end-play of the assembly and runs against the end of the key. A circlip is not advisable in this position.

The thrust block

The thrust block is designed to fit securely to the existing boss at the right-hand end of the countershaft bracket. You will probably find that the boss is reasonably cylindrical, so remove the grease nipple and clean off all the paint. The thrust block must fit over this diameter quite closely. If your fit is right, the single clamping screw is sufficient to hold it in position under working conditions. The slot in the thrust block for the web and the cut-away portions are positioned angularly to bring the operating lever to a convenient working position. Make careful note of the present position of the grease nipple that you have removed and drill and tap a hole in the thrust block to take the nipple so that it registers with the grease hole in the boss. There is no need to dismantle anything else just yet.

The thrust collar is necessary to keep the countershaft positioned against the axial operating force. It is held in position by two short 6BA grub screws as the simplest method of assembly. These screws can only be $\frac{3}{16}$ in. long, as they must not protrude above the surface of the thrust collar when assembled. If you prefer a circlip, this can be accommodated. The fibre washer reduces the possibility of wear at the rubbing faces. The spring provides the axial thrust to engage the clutch. It must slide easily over the $\frac{1}{4}$ in. diameter push rod and inside the $\frac{19}{32}$ in. diameter bore, so it needs to be very little more than $\frac{3}{4}$ in. outside diameter. If you have to make it, try winding 16 or 18 standard wire gauge piano wire over a $\frac{3}{16}$ in. diameter mandrel.

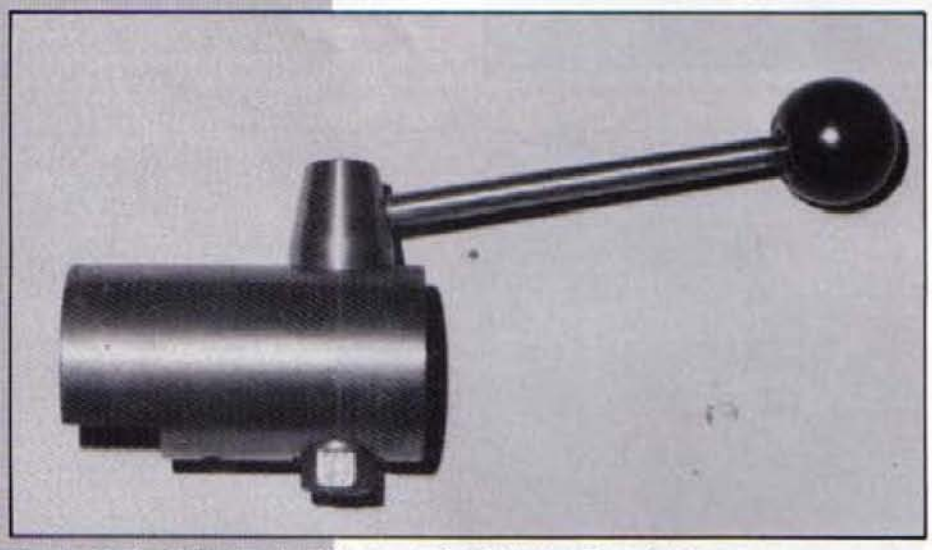

Thrust block with operating lever assembled prior to final mounting.

Fitting the clutch to the pulley

We can now proceed to fix the half-clutch to the pulley and it must be concentric with the new driving shaft. So, insert the shaft into the pulley, assemble the clutch on to the shaft with the two halves together and slide it into contact with the pulley. Holding the assembly firmly, now mark through the holes in the pulley web to position two diametrically opposite holes in the clutch. Separate the clutch, drill and tap these two holes. Use these holes to fix the half-clutch to the pulley and you can now drill the remaining

Adjustments and assembly

It is essential that there is some provision for adjustment of the clutch and this is achieved quite simply. The disc securing the push rod to the boss of the clutch by means of four screws is threaded to receive the push rod which has a slot in the end. Rotating the rod by means of this slot moves the clutch relative to its mating half, the locking nut being tightened when correct adjustment is achieved. When all components are ready, we can proceed to dismantle the existing countershaft. The cone pulley is held to this by two screws which need an Allen key. Things are much easier if you first remove the belt guard.

Proceed to assemble items on to the new countershaft from the right-hand end. First the thin steel washer, then the new driving pulley with half-clutch attached, followed by the second thin steel washer. Thread the shaft into position in the bracket bearings, not forgetting to assemble the cone pulley the right way round! Remember also the driving belt and the two rubber collars which are part of the belt guard assembly. Assemble the fibre washer and finally the thrust collar on to the end of the shaft – with plenty of grease! Now thread the spring on to the end of the push rod and slip this into the hole down the countershaft, well greased, followed by the thrust plunger.

We now have to fit the thrust block which should be complete with operating lever and plenty of grease. With the clamp screw lightly assembled and the lever in the drive position, slip the block over the bracket boss. It will go most of the way without undue resistance. Now brace yourself and push really hard to get the block as far as it will go against the resistance of the spring, which should be up to the end of the boss. Tighten the clamp screw.

The screwed end of the push rod will now extend beyond the end of the shaft. Slip on the sliding half-clutch, screw on the disc and fix the disc to the clutch by means of the four screws. You can now check that the clutch engages and disengages, making any necessary adjustments by a screwdriver in the end of the push rod; any tendency to slip under power can be corrected in this way. Then tighten the locking nut.

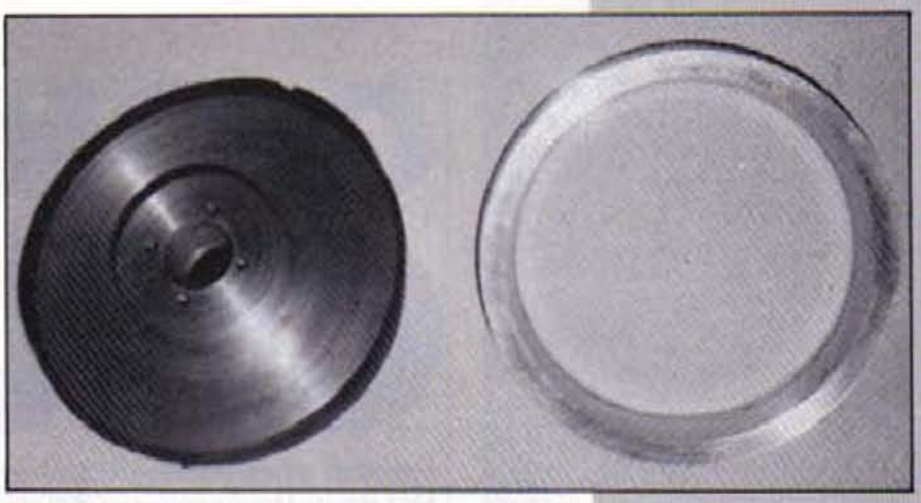

The two mating halves of the clutch.

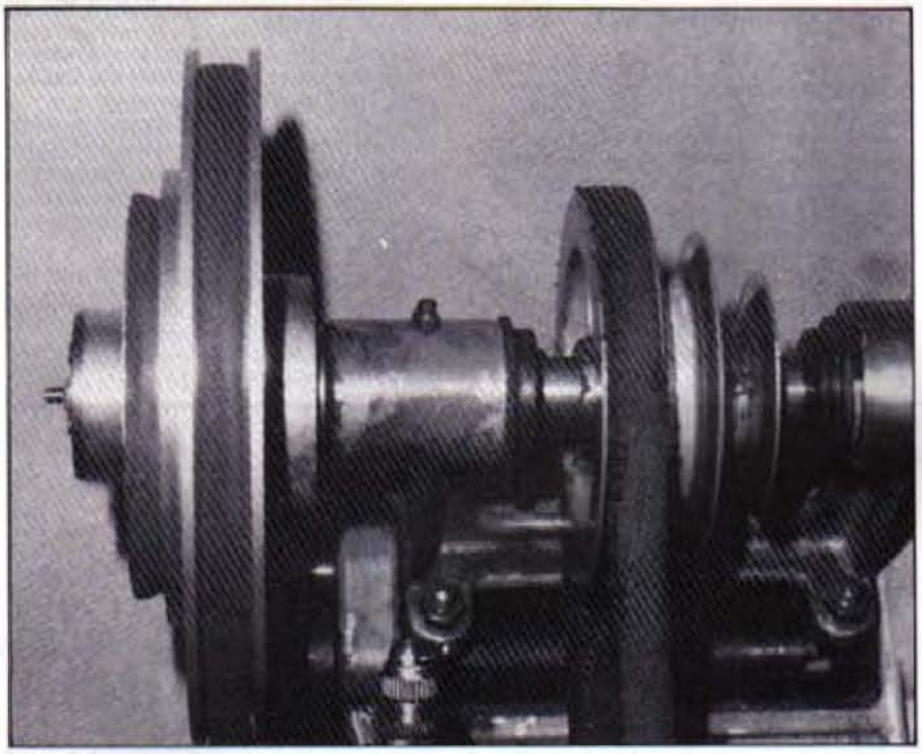

The new clutch takes up little more space than the old drive.

Modifying the guard

Now hold on! You haven't finished yet. The clutch takes up more room than your previous drive and will foul the motor-belt guard, which therefore needs modifying. For this you need to make three cylindrical spacers about ⅜ in. diameter and about ½ in. long. Remove the motor-belt guard and remove the three 2BA screws holding the flat plate to the inside of the guard; now reassemble with a spacer on each screw under the plate. The fixing boss on the side of the guard is now lengthened by another short spacer which can be secured to the face of the boss by epoxy adhesive. Fix the guard back into position and check that it has sufficient clearance.

Usage

Any accumulative wear on the clutch is very gradual, so it should stay in adjustment for a long time once you have set it. Any subsequent adjustment is quite simple, requiring only a screwdriver and 2BA spanner at the clutch end of the push rod.

It is advisable, as always, to keep shaft bearings well greased. The driving pulley may well be required to idle for intermittent periods over long working sessions, so keep it well greased or oiled.

With a clutch, you will find that your work speeds up and is very much more convenient – with much less stress on motor and switchgear!

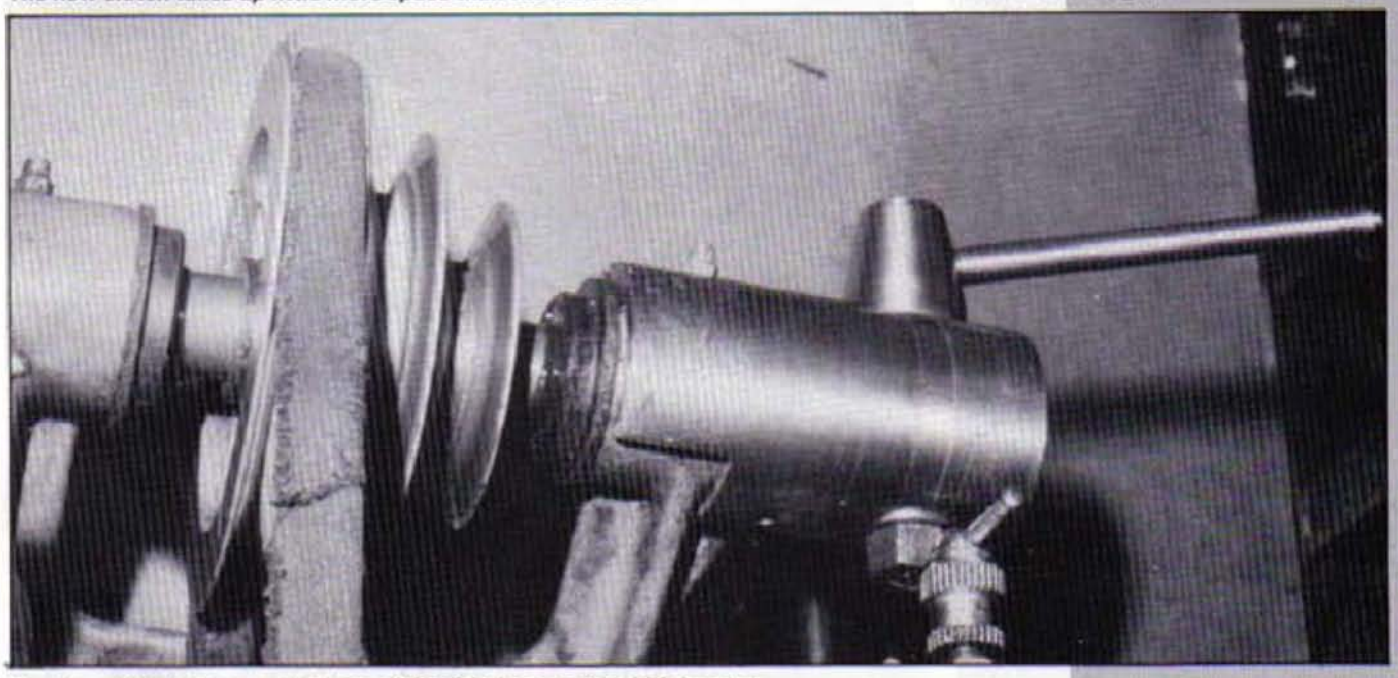

The thrust block fits over the boss of the existing countershaft bracket.

GEOMETRIC CHUCK

Part 2 of a two-part feature (the first instalment appeared in our last issue, the April/May 1991 number). This challenging project is the work of reader Mr. Allard of Walsall

Brass bearing for wheel X, Figure 28

Chuck some hard brass 1¼ in. diameter about 2¼ in. long in the 3 jaw. Reduce to 1¼ in. diameter for a distance of ⅞ in. from the tailstock end. True a further ¼ in. to just below 1¼ in. diameter. Drill through the centre with a ¼ in. drill to a depth of 1 in. Open out with a boring tool to a diameter of 1 in. for a depth of ⅜ in., leaving a square shoulder inside and a polished finish.

Assemble the top slide including the centre bearing and screw the whole mechanism on to the lathe mandrel, with all fastening tight and giving support with the tailsock centre. Turn at a slow speed, trimming the bearing down to size and facing true and trying the brass bearing for wheel X from time to time, in order to get a smooth-turning fit.

When completed, turn the rest of the rod down to ¼ in. diameter with a polished finish – use one of the gear wheels as a gauge – drill the brass bearing for wheel X on each side as shown, with No. 37 drill, tap 5BA and fit the screws. These are to hold the bearing fast to the centre arbor when facing the top edge in the lathe, and when drawing or cutting patterns. Place the bearing over the centre and fasten with the two screws. Screw the whole mechanism onto the lathe nose and support with the tailstock centre. Face the brass bearing so that it runs true.

Wheel X

Chuck a 2¼ in. diameter by ¼ in. thick hard aluminium blank in the 3 jaw. Centre drill ¼ in. and open out to approximately ¾ in. with a boring tool until it is a running fit on the centre arbor, removing the top slide plate along with the arbor in order to size the hole while wheel X is in the lathe. Remove the wheel and place on a stub arbor which has been turned to size in the lathe. Turn the blank down to 2.4675 in. and cut 96 teeth.

Drill 3 equi-distant holes in the wheel on a circle ⅝ in. from the centre with a No. 37 drill.

Place the bearing onto the centre arbor followed by wheel X. Fasten the two together with cramps and drill through the 3 holes in the wheel into the brass bearing. Tap these holes 5 BA. Open out the holes in the wheel with clearance drill No. 30 and countersink, screw the two together. Replace the top slide plate and put the wheel with the bearing attached onto the arbor. See that all the screws are tight and screw the whole onto the lathe mandrel and, supporting with the tailstock, turn the face of wheel X true to just below the wheel teeth.

Support sleeve for arbor of P & Q wheels

Chuck in the 3 jaw some ¾ in. diameter hard brass leaving 1¼ in. outside the chuck jaws. True the outside diameter for a distance of 1 in. and cut a groove 3/32 in. wide and 1/32 in. deep and 3/32 in. from the end. At ¼ in. from this, turn down the remainder to ½ in. diameter (see **Figure 29**). Centre drill and follow with drill and ¼ in. reamer for a length of 1⅛ in. Part off.

Base for support sleeve

Take a piece of ⅛ in. thick brass 1⅞ in. long by ⅝ in. wide. Punch mark and drill the centre ½ in. diameter. Turn the end of the support sleeve to fit the ½ in. hole in the

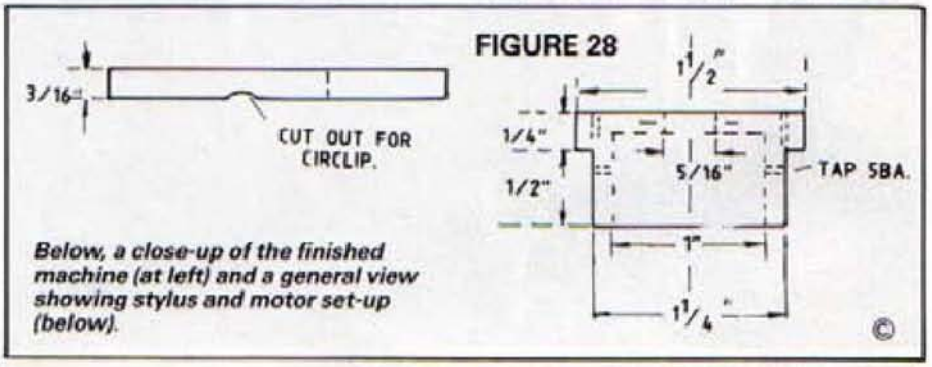

FIGURE 28

Below, a close-up of the finished machine (at left) and a general view showing stylus and motor set-up (below).

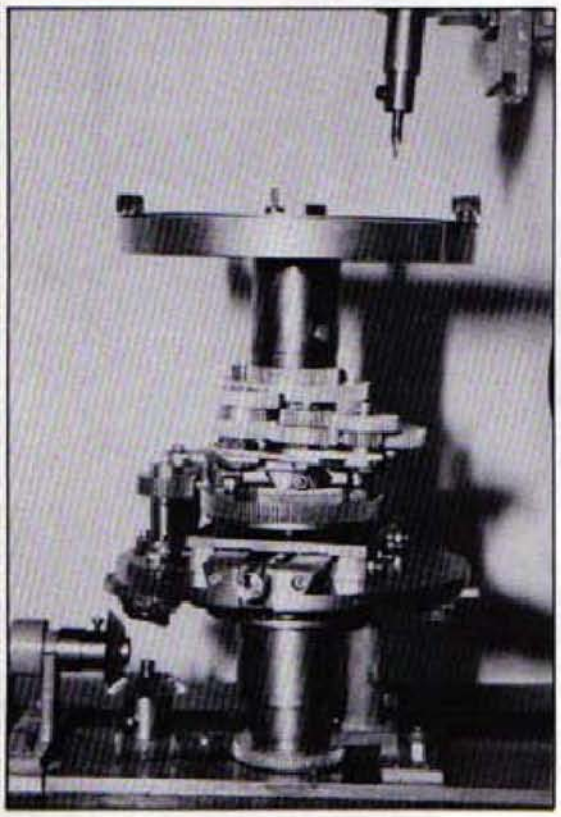

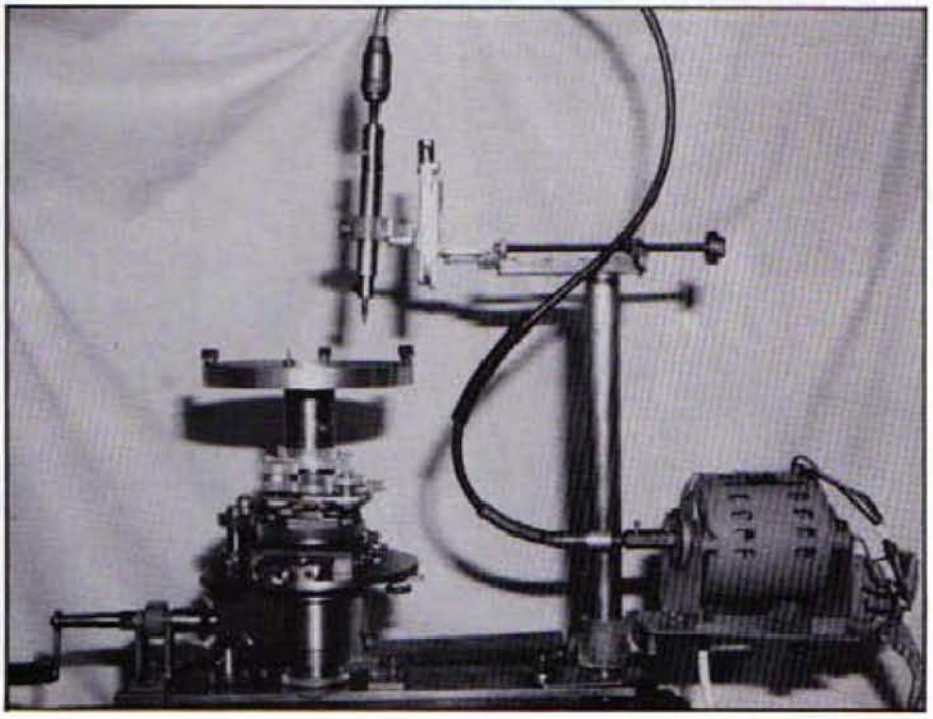

FIGURE 29

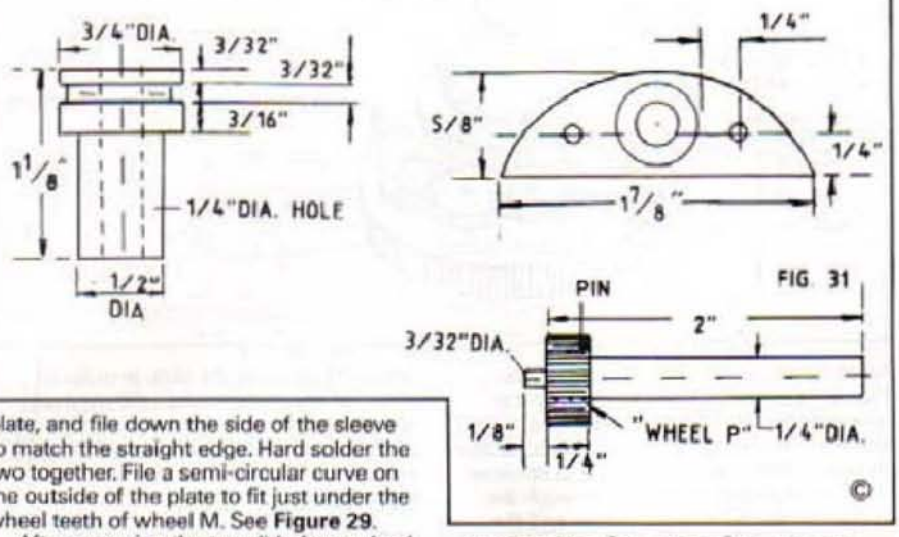

plate, and file down the side of the sleeve to match the straight edge. Hard solder the two together. File a semi-circular curve on the outside of the plate to fit just under the wheel teeth of wheel M. See **Figure 29**.

After removing the top slide from wheel M, mesh the teeth of wheel Q and wheel P. Punch mark through wheel P with 1/4 in. diameter punch. Drill carefully with a small drill following with one 9/32 in. diameter through the backplate.

Arbor for wheels P & Q

Chuck 3/8 in. diameter silver steel, and drill the end with a centre drill. Draw out to leave 2 3/4 in. outside jaws and support with small tailstock centre. Turn down a length of 2 1/4 in. to approx. 1/4 in. diameter trying the brass support from time to time to ensure a nice running fit with a polished finish. Mark the work opposite No. 1 chuck jaw, and part off. Reverse in the lathe and turn down to just over 3/8 in. polishing out all turning marks. Broach out the pivot hole from the inside so that the pivot which should be 1/4 in. long is a running fit.

Mark two fastening holes on the base of the support 1/4 in. from the upright and 1/4 in from the straight edge and drill both holes No. 22. Fasten wheel P on the arbor as in **Figure 31** with a small cross pin. Place in position and making sure of correct engagement of wheel teeth, clamp the support and wheel M. Mark through the holes with a No. 22 drill. Remove and carefully centre punch each mark, drill with a small drill and follow with No. 22. Tap both holes 2BA Open out the holes in the support with a No. 13 drill.

Figure 30 shows the support fitted without the arbor, also part of the slide on wheel M.

Wheel Q Figure 31

Turn a brass blank thick to 0.5675 in. diameter then 3/8 in. of it to 9/32 in. diameter. Drill and ream the centre hole to 1/4 in. diameter. Cut 20 teeth. Cross drill No. 52 on the plain diameter. Assemble the arbor with wheel P and screw down the upright support. Place the wheel Q, just cut, in position on the top of the arbor, marking through the cross-drilled hole and marking off the arbor at the top of the wheel. Cross drill the arbor, cut off to length and polish the top. The whole can now be assembled on wheel M.

FIGURE 30

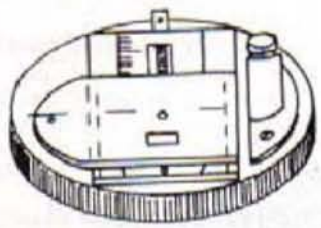

FIGURE 31
WHEEL Q

FIGURE 32

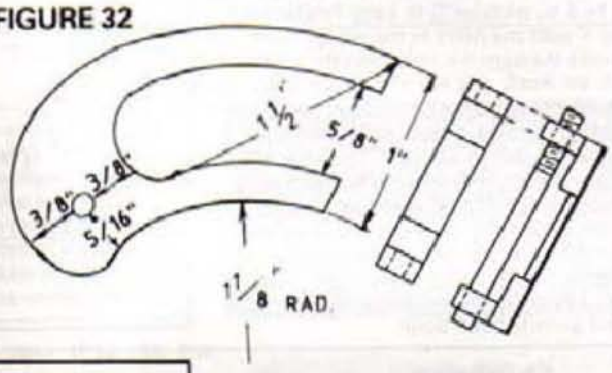

FIGURE 33

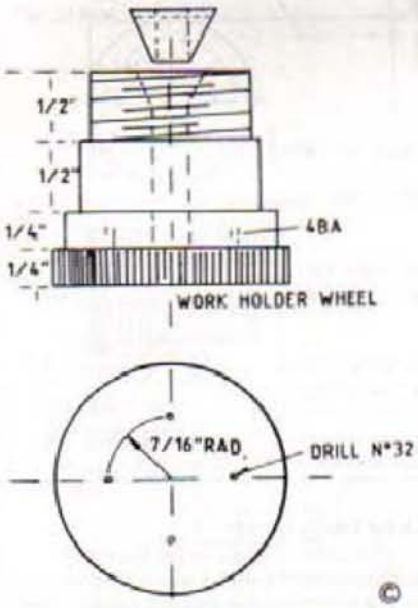

Wheels for second train and work holder

Put a hard aluminium blank 1/2 in. thick by 3/4 in. diameter in the self-centring chuck. Drill a centre hole with a centre drill and follow with small drill, and finally with a 1/4 in. drill. Face each side as far as chuck jaws will allow. Remove from chuck, place onto stub arbor, complete facing each side and turn down to 1.5675 in. diameter. Cut 60 teeth for the work holder wheel.

For the 56 tooth wheel, chuck an aluminium blank 1/2 in. thick by 1 3/8 in. diameter, drill the centre 1/4 in. as before, set up a boring tool and bore out to 1/2 in. diameter, remove from the chuck and turn a brass bush to be a tight press fit in the 1/2 in. centre hole. After fitting, replace in the chuck and face each side. Centre drill as before finally drilling and reaming 1/4 in. Cut the 56 teeth, with the wheel on the stub arbor. Make the four 40 tooth wheels in the same way using a 3/4 in. diameter brass plug in the centre instead of 1/2 in. Any wheels required smaller than these should be made of brass.

Support for wheel R, Figure 32

Cut the shape as shown from hard brass 1/8 in. thick to be a sliding fit in the slot at the top of the sleeve. The tensioner can be made from two pieces of 1/4 in. thick brass 1/4 in. square and one 1/4 in. by 1 1/4 in. Drill one of the square pieces in the centre No. 32 size and the other No. 27. Position the small ones at each end of the long piece, fasten with 10BA screws and silver solder, being sure that the space between is 1 in. File the centre portion down to around 1/8 in. to give a certain amount of spring. Tap one end 4BA passing the tap through the other end hole. Use a 1 1/4 in. 4BA bolt to tension the device when in position.

Work holder mandrel, Figure 33

Chuck a piece of 1 1/4 in. diameter brass or hard aluminium alloy 2 3/4 in. long approximately, in the three jaw leaving 1 1/2 in. outside the jaws. True the diameter for 1 1/4 in. and turn down 1 in. to 1 1/4 in. diameter, then turn down the first 1/2 in. to 1 1/8 in. diameter. Thread this portion 12 TPI similar to the first one made – try a small faceplate while the work is in the lathe to ensure a good fit. Centre drill and follow with a No. 1 drill then bore out to be a running fit on the centre arbor which has been removed from the top slide in order to size the hole while the mandrel is still in the lathe.

Set the top slide of the lathe over to 15 deg. and bore out until the outside of the hole is 1/2 in. diameter. Widen the hole

slightly at the bottom of the slope for a distance of ¼ in. approximately to allow clearance for the tapered adjusting screw. Part off at a length of 1¼ in.

Thread the centre rod ¼ in. by 40 for a distance of ½ in.

Adjusting screw

Chuck ⅝ in. diameter round hard brass in the three jaw. Centre drill and follow with a No. 3 drill to a depth of ½ in. and tap ¼ in. by 40 again set the top slide over to 15 deg. and slope the outside to fit the recess in the mandrel. Part off at ⅝ in. long. Turn up a temporary arbor from hexagon mild steel. Thread ¼ in. by 40 and screw on the adjuster in order to slot the top for a screwdriver and to polish the top.

To fit the mandrel to the work holder toothed wheel make 4 equidistant punch marks on a ¾ in. diameter circle on the toothed wheel and drill No. 32. Turn the mandrel upside-down on the centre arbor with the toothed wheel on the top, and fasten the two together with a ¼ in. by 40 TPI nut. Mark through the four holes with a No. 32 drill on to the mandrel. Separate and carefully punch the marks. Drill with a small drill and follow with a No. 32 and tap No. 4BA. Open out the holes in the wheel with a No. 27, and countersink to leave the top of the screws slightly below the surface. Place on the arbor to fasten, then turn over on the arbor in order to determine the shape of the click and spring.

Click and Click spring on wheel X, Figure 34

Make the click as shown from TN8 ¾ in. thick by ⅜ in. wide by 1¼ in. long. Position on wheel X with the point in the wheel tooth and mark through the hole onto the wheel. Punch the mark, drill No. 29 and tap 3BA. Make the screw as shown, fasten, and make sure the click moves freely. Make the block for the spring from ¼ in. square brass ⅝ in. long. Soften 1¼ in. length of clock spring ¼ in. wide by 0.045 in. approximately and drill, file, and shape as shown. Harden and temper to blue.

The centre arbor can now be cut to length, the top slotted and polished if this has not already been done.

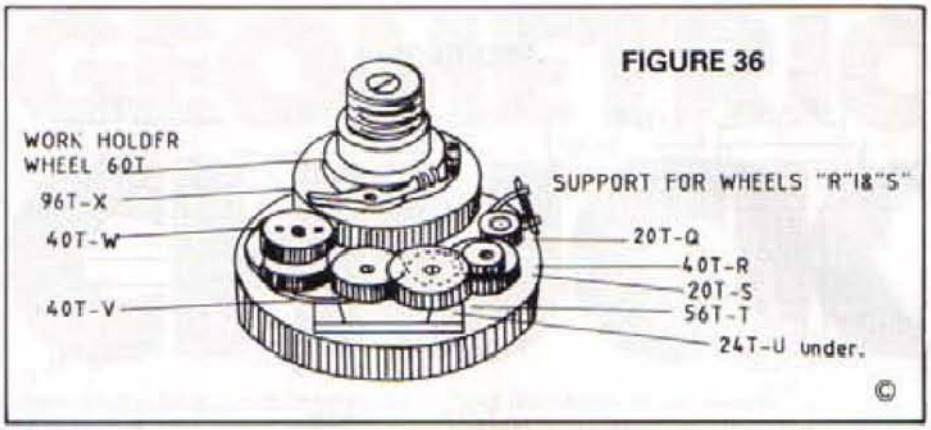

holes opposite each other on this circle. Punch mark and drill No. 50. Turn up the spacer to the thickness required to a diameter just below the wheel teeth. Fasten the two wheels with the spacer in between on a ¼ in. diameter arbor, drill through the two holes No. 50 into the spacer and the bottom wheel. Tap the bottom wheel 8BA and open out the top and the spacer with a No. 43 drill. Fasten the whole together with 8BA screws, fasten wheels H and G in the same way. Use a similar method with wheels T and U and R and S but use blue steel through the holes instead of screws.

where it fastens to the slide in order to allow for adjustment when different size wheels are being used.

This completes the chuck with the exception of the work holder faceplate which is the next item to be made.

Wheel Boss for work holder faceplate. Figure 37

Chuck a piece of bright mild steel, brass, or hard aluminium 1½ in. diameter leaving 1½in. outside the jaws. Centre drill, follow with a ¼ in. drill to a depth of 1¼ in. Bore out to a diameter of 1 in. Bore the last ¼ in.

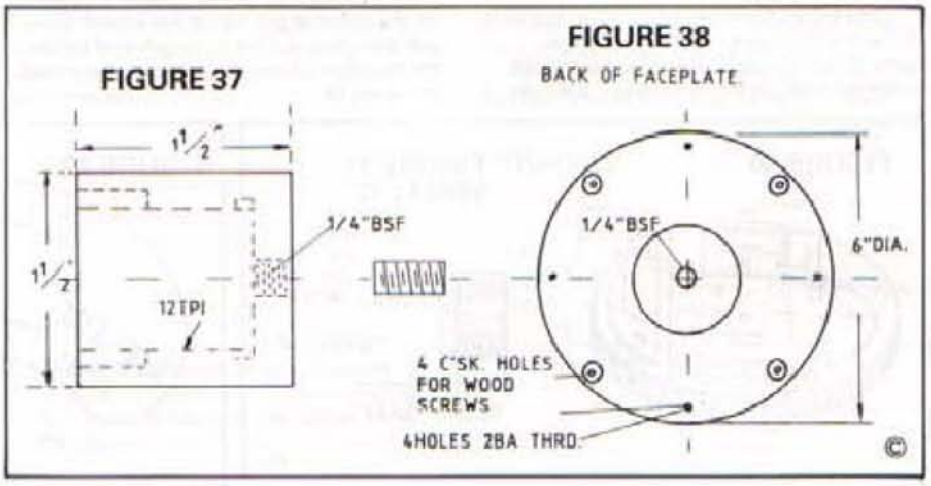

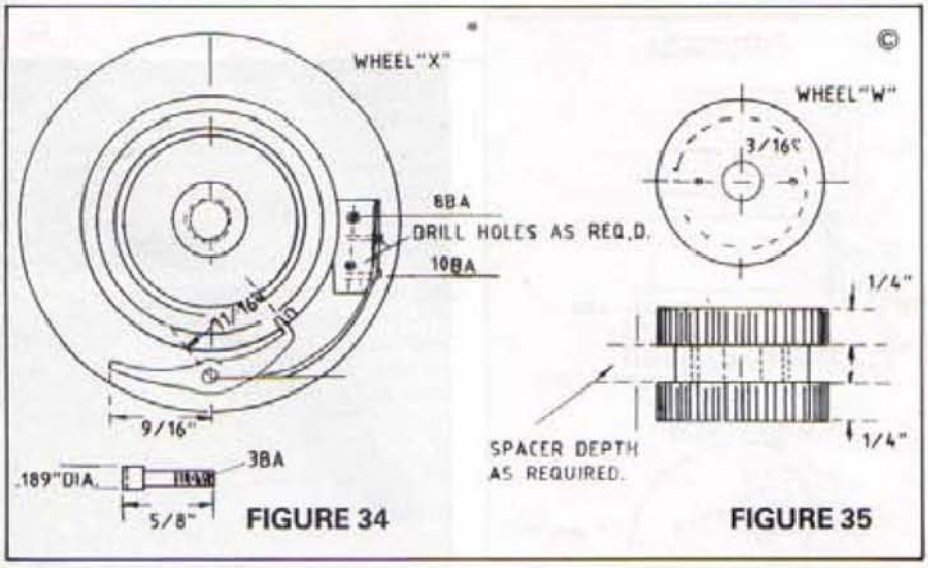

Wheel W, Figure 35

Mark a circle ⅜ in. from the outside edge of the centre hole, on one of the 40 tooth wheels already made and mark for two

Lazy tong links

These links can be made from hard aluminium in the same way as those made for the first train, the end link being slotted slightly deeper to allow clearance for a screw cutting tool. Screwcut 12 TPI as with the first boss made, taking off the first ½ in. of the thread as before and ensure a good fit on the mandrel already cut and attached to the work holder division wheel.

Screw the boss onto the Myford lathe mandrel. Part off at 1½ in. and trim. Centre drill and follow with a No. 3 drill and tap ¼ in. BSF countersink slightly.

Faceplate, Figure 38

Take a hard aluminium blank 6 in. diameter by ½ in. thick and punch mark the centre, then mark 4 equidistant holes around the perimeter ¼ in. from the outside edge. Drill and tap 2BA. Also another 4 holes in between as shown for wood screws. Countersink the underside.

Fasten to a faceplate with 2BA screws from the back using the tailstock centre in the punch mark to position correctly. Trim the face true. Centre drill and follow with a No. 3 drill to a depth of ⅝ in. and tap ¼ in. BSF. Leave the centre portion of the disc at ½ in. thickness to a diameter of 1½ in. Turn the rest down to ⅞ in. Thread ½ in. length of ¼ in. bright mild steel ¼ in. BSF Slot one end

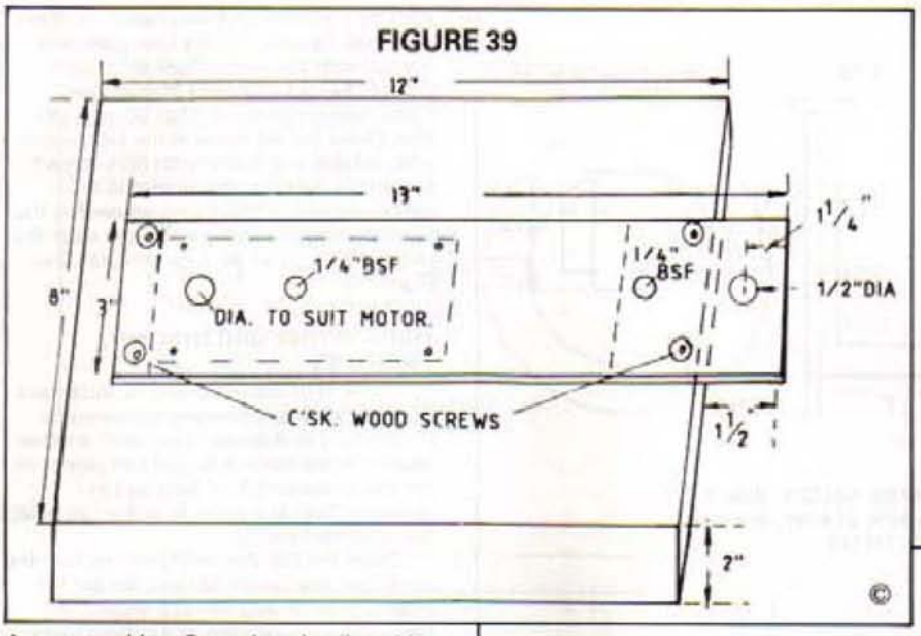

for a screwdriver. Screw into the disc with Loctite. Screw on the boss again using Loctite. Put in the lathe and turn true.

Paper-retaining disc for faceplate

Cut from mild steel 1/16 in. thick a 6 in. disc and fasten with clamps to the faceplate. Mark through the threaded holes and drill clearance for 2BA (0.189 in.). Cut a similar disc from 1/8 in. plywood and deal with in a like manner. Fasten the metal disc with the plywood backing to the faceplate and cut out the centre of the metal to leave a ring 1/8 in. wide.

Wood base for geometric chuck

The shape and size of the base will depend on the size of the geared motor used to drive the chuck and I can only describe the one I made, as shown in figure 39.

Chuck and pillar support plate

I had a geared motor on hand. It was intended for use in an electric oven to drive a rotary roaster and was quite suitable for the chuck. The motor was fitted under the support plate which was made from bright mild steel, 3 in. wide × 13 in. long × 1/4 in. thick, with 4BA countersunk screws. The drive being 1 1/2 in. from one end on the centre line. A 40 tooth wheel was cut to fit on the drive, also a 40 tooth intermediate wheel to give the correct rotation; an 80 tooth wheel was cut for attachment to the mandrel. (The item made first.) The 1/4 in. blank was centre drilled and reamed 1/4 in., turned to size, 2.0675 in. and the teeth cut.

The intermediate wheel, of the same thickness, was meshed with the wheel on the motor arbor, on the centre line of the support plate and the centre carefully punch marked. This was drilled clearance for 4BA, No. 27 and a screw made for the intermediate wheel. The two wheels were then fitted and tested for free movement.

The centre wheel with 80 teeth was meshed with the intermediate wheel, again the centre being carefully marked on the plate, punched and drilled with a small drill, followed by No. 3 and tapped 1/4 in. BSF a small temporary arbor was made in order to test the free movement.

The wheel now had to be drilled for attaching to the boss. 4 equidistant holes were drilled at a distance of 3/4 in. from the centre hole with a No. 37 drill. The wheel was then fashioned to a wooden faceplate in the lathe using the tailstock centre to position correctly and the centre bored out to fit the step on the bottom of the mandrel.

The wheel was placed on the boss and one hole drilled into it. The wheel was removed and the hole drilled to a depth of 1/2 in. with the No. 37 drill. This was tapped 5BA. The appropriate hole in the wheel was opened out for clearance and countersunk, then the wheel was fastened to the boss. The other three holes were now treated in a like manner.

The support plate was now drilled, (see **Figure 39**) on the centre line, at the opposite end as shown for the pillar and pillar-retaining plate. Also the fastening holes for the wood screws were drilled and countersunk. The plate was fastened temporarily to the wooden base with the motor attached leaving 1 1/2 in. overlap at the opposite end to the motor to clear the pillar nut and washer.

Cylinder and disc-retaining pin, Figures 41 and 42

For the base, cut three pieces of bright mild steel 3/8 in. thick, 1 in. wide. One 2 in. long, one 1 in. long and one 1/2 in. Drill No. 50 on the centre line of the 2 in. piece 3/4 in. from one side, also drill 2 holes on the opposite side No. 50 × 3/4 in. from each end. Mark through the 2 holes onto the small piece laid equidistant from the ends of the 2 in. piece carefully centre punch the marks, drill No. 50 and tap 8BA. Fasten with

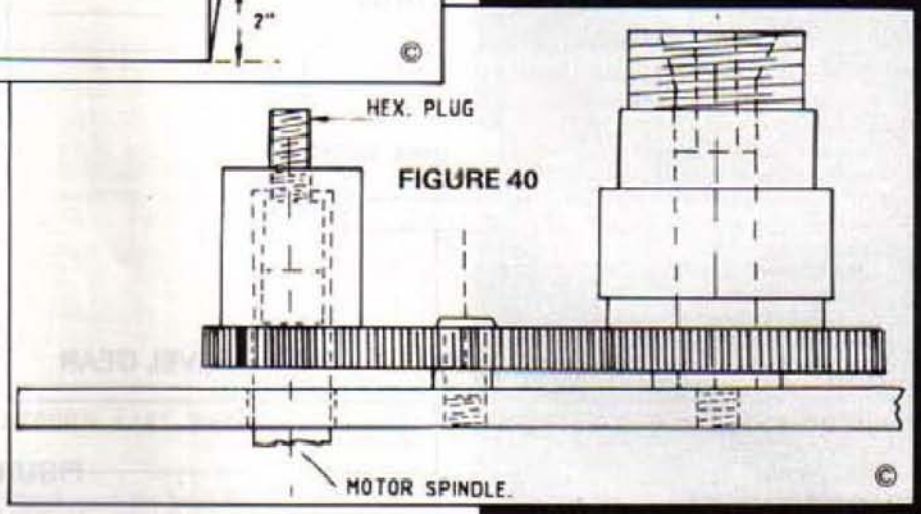

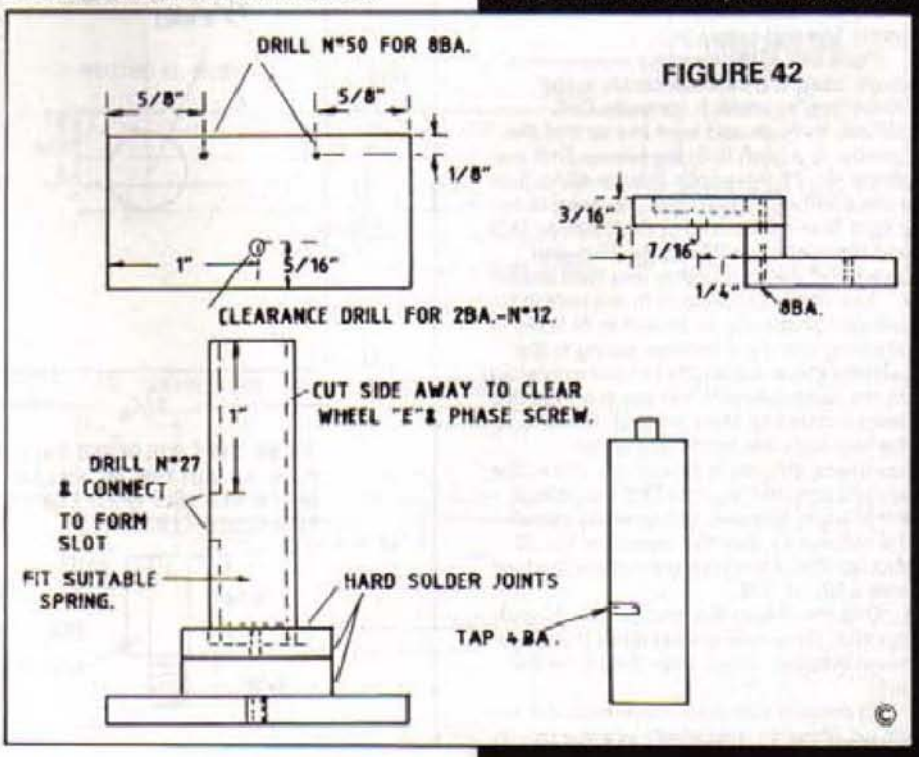

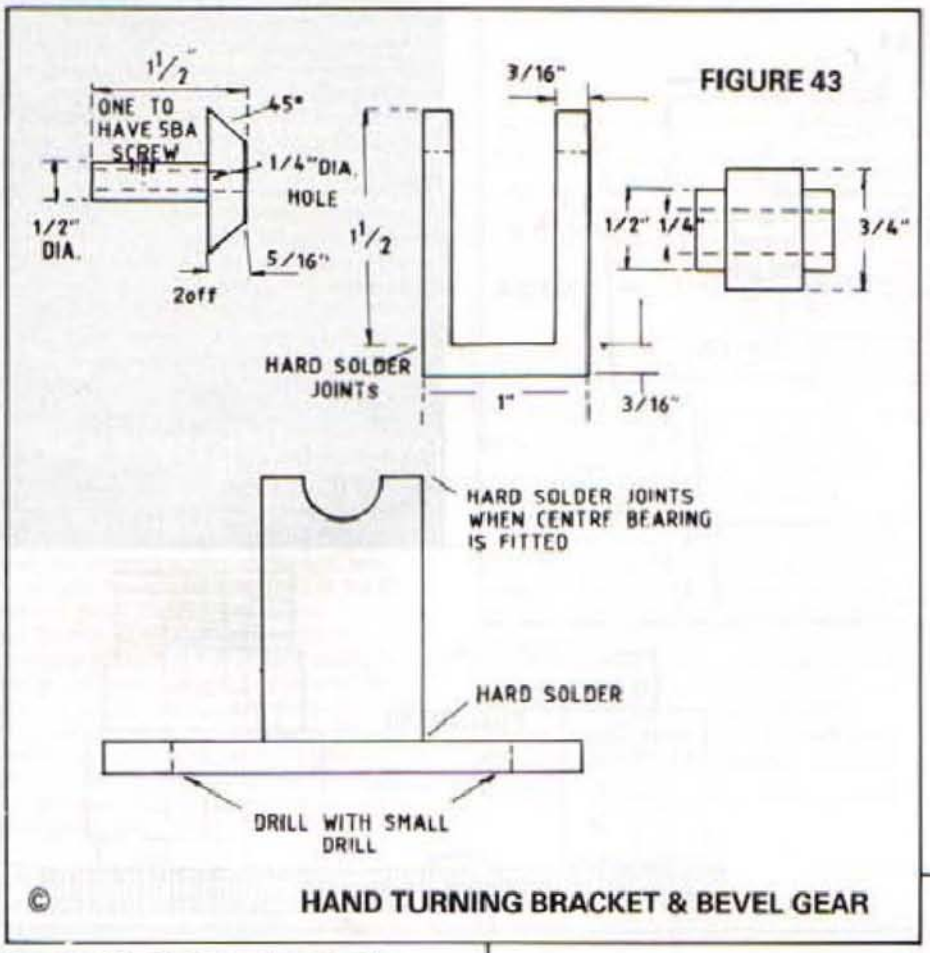

2 screws. Drill 2 holes on the end of the other 1 in. piece ¼ in. from the end to miss the first 2 screwholes. Fasten with a clamp on top of the small piece, mark through, centre punch, drill and tap 8BA as before.

For the cylinder, chuck a piece of ⅝ in. diameter bright mild steel tube just over 2 in. long to allow for facing each end in the lathe. Face to 2 in. long. Measure 1 in. from one end and drill No. 27, drill another hole ¼ in. from the first, connect with a round file to form a slot. Measure ⅜ in. from the end of the top piece of the cylinder stand on the centre line and centre pop.

Place this in the four-jaw independent chuck using the tailstock centre in the centre pop to position correctly. Drill halfway through and bore out so that the cylinder is a push fit in the recess. Drill the centre No. 27, (clearance drill for 4BA). Turn a piece of bright mild steel ⅜ in. thick to be a tight fit in the bottom of the cylinder. Drill and tap centre for 4BA screw. Flux and fasten the pieces together and hard solder.

Turn BMS 1¾ in. long to fit the hole in the cylinder. Shape top as shown to fit holes in retaining disc. Fit a suitable spring in the cylinder. Place the whole fitment in position on the baseplate with the pin in one of the holes in the disc. Mark through the hole in the foot onto the centre line of the baseplate, also mark around the slot in the upright onto the plunger. Drill the hole in the plunger. Remove and carefully punch the two marks. Drill the baseplate No. 22 and tap 2BA. Open our the hole in the foot with a No. 12 drill.

Drill the hole in the plunger No. 32 and tap 4BA. (This hole should allow the screw when inserted to just clear the top of the slot).

To prevent sideways movement, cut two pieces of bright mild steel ¼ in. wide by ¼ in. thick by 1 in. long. Drill two holes ¼ in. from each end. Fasten onto the baseplate with clamps with the pieces tight up to each side of the foot and mark through the holes, centre punch, drill No. 50, and tap 8BA. Open out the holes in the pieces with a No. 43 drill and fasten with 8BA screws. Fasten the cylinder attachment to the basement with a 2BA thumbscrew. File the top including the plunger so as to clear the phase screw on wheel E as it rotates. See **Figure 42**.

Hand turner and bracket, Figure 43

Chuck 1¾ in. diameter by ⅝ in. thick hard brass in the 3 jaw, bore the centre out to just under ⅝ in. diameter. Deal with another section in the same way. Cut two pieces of the same material 1½ in. long by ⅝ in. diameter. Trim to a press fit in the ⅝ in. hole, flux and hard solder.

Chuck the ⅝ in. diameter portion, turn the large diameter down 36 mm., set the top slide over to 45 degrees and slope the bevel. Set up a flycutter in a cutting frame on the top slide at 42 deg. and cut the 30 teeth. Cutting at 42 deg. means that the teeth on the smaller diameter will be slightly thicker than they would be if cut at 45 degrees. Shape the teeth with a square file. Although the teeth are not strictly accurate, the wheels work very well. The fly-cutter is the same one used to cut the other wheels.

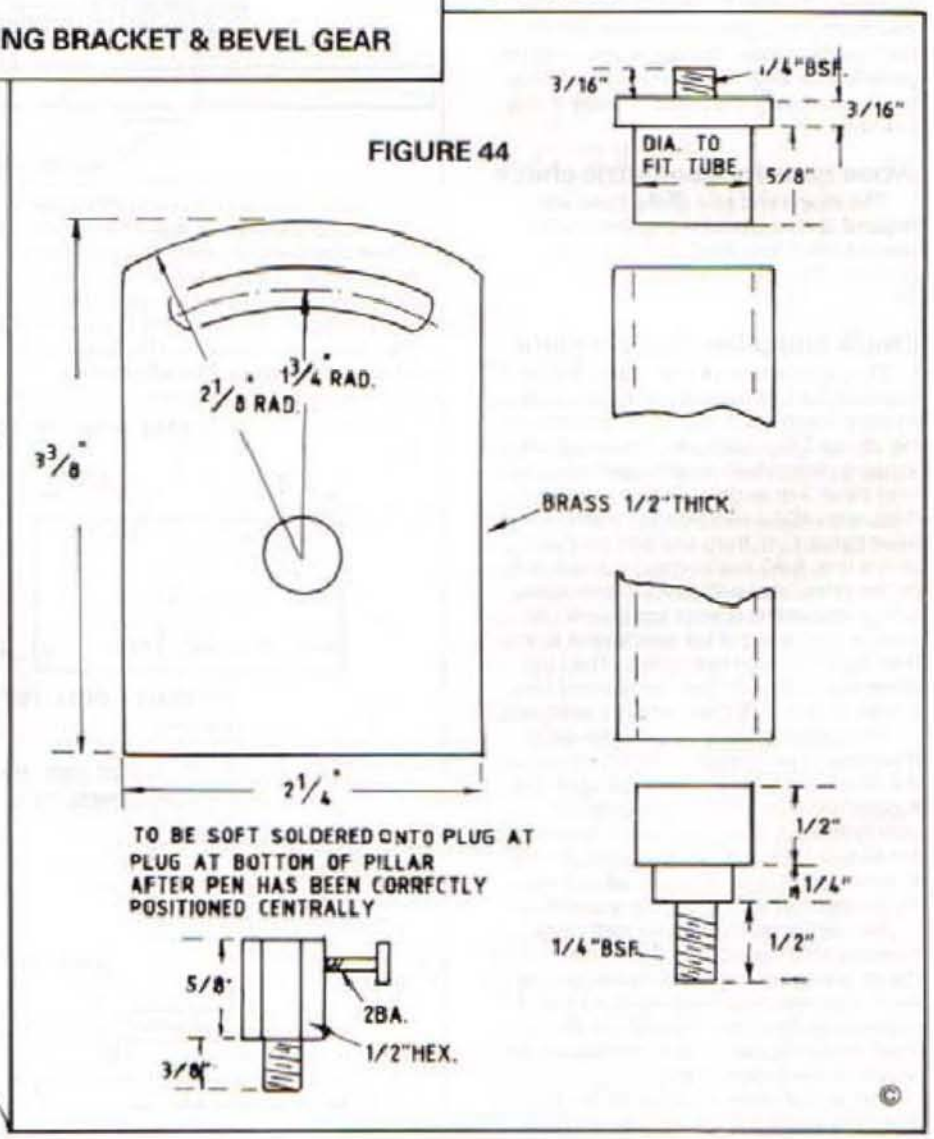

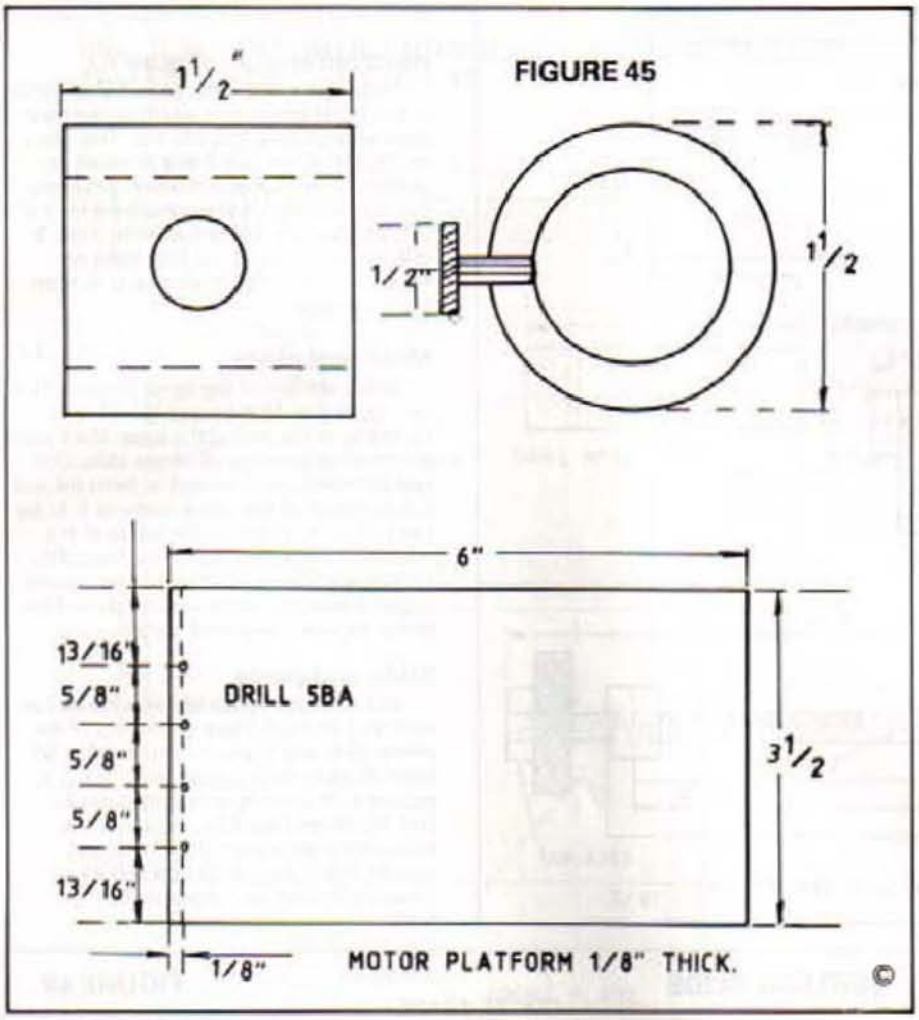

The hand turner bracket is made as follows:
Fabricate from 1 in. by $\frac{3}{16}$ in. bright mild steel, cut the base 3 in. long, also piece 3 in. to form the two side supports. Drill the 3 in. side support piece with a $\frac{1}{2}$ in. hole in the centre and cut through the middle to form 2 semi circles. Position the two pieces in-to the base as shown, fasten with screws from underneath the base and hard solder.

Cut off the stem of the bevel gear (the one without the 5BA screw) and fasten to the top of the motor wheel with two countersunk screws.

Turner spindle

Turn this from $\frac{1}{2}$ in. hexagon bright mild steel $3\frac{1}{2}$ in. long. Centre drill one end with drill in tailstock chuck. Support with tailstock and turn down to a running fit in the centre bracket for a length of $2\frac{1}{4}$ in. leaving a square shoulder. Reverse in the chuck and reduce the diameter to $\frac{3}{16}$ in. for a length $\frac{3}{8}$ in. Drill the end for a depth of approximately
$\frac{1}{2}$ in. with No. 8 tap 0BA. File a flat at the $\frac{1}{4}$ in. diameter end to suit the fastening screw in the bevel gear.

A turning handle can be made to suit personal preference. I made one from a cranked clock winder fitted with and made longer with an extension to fit the 0BA end of the turning spindle.

A $\frac{1}{4}$ in. thick section of bright mild steel 3 in. long by $\frac{1}{2}$ in. wide will be needed to stand the bracket on. This to be fastened to the wood base by two screws, $1\frac{1}{4}$ in. from each end. Place the bracket with spindle and bevel gears fitted in correct mesh. Mark through the two small holes drilled. Punch mark the base. Remove the wood screws. Drill and tap the two marks $\frac{1}{4}$ in. BSF. Open out the holes in the bracket to $\frac{1}{4}$ in. diameter. A certain amount of packing will probably be required on the turning spindle such as a washer, and a piece of steel under the bracket to hold the gears in mesh.

Pillar, Figure 44

Cut a 1 ft. length of bright mild steel tube 1 in. outside diameter. True one end. Clean inside and score to a depth of $\frac{1}{2}$ in. Turn a piece of round brass to fit, as shown. Turn on a shoulder $\frac{1}{2}$ in. hole in the baseplate to fit, $\frac{1}{2}$ in. from the end, then turn to $\frac{1}{4}$ in. diameter for $\frac{1}{2}$ in. and thread $\frac{1}{4}$ in. BSF. Score outside of the brass plug, flux both tube and plug, press plug into end of tube to within $\frac{1}{4}$ in. and hard solder.

Turn plug for the top end as shown (the $\frac{1}{4}$ in. end fits into the bottom of the horizontal slide). Before soldering the plug in the pillar-drill a small hole in the side of the pillar to allow hot air to escape.

Turn a brass washer for the bottom of the pillar $\frac{1}{4}$ in. wide by $1\frac{1}{4}$ in. diameter with a $\frac{1}{4}$ in. centre hole. Make the brass plate (which soft solders onto the plug at the bottom of the pillar when the pen is positioned correctly) as shown, also the $\frac{1}{4}$ in. hexagon retaining screw.

Motor platform, Figure 45

Turn a brass or bright mild steel collar $1\frac{1}{4}$ in. diameter and bore out for a sliding fit on the pillar. File a small flat on one side and in the centre of this drill and tap 2BA. Fit 2BA thumb-screw on the opposite side file a wider flat and make a punch mark $\frac{3}{16}$ in. from one end, drill and tap 2BA. Cut a piece of bright mild steel $2\frac{1}{2}$ in. long by $\frac{1}{4}$ in. thick by $\frac{3}{4}$ in. wide to suit required position of motor. This must be fastened to the platform so that the drive spindle clears the pillar sufficiently to ensure that the flexible shaft can be connected. Hard solder the collar to the crosspiece. A support plate is required to be fastened to the crosspiece. The dimensions will depend on the size and type of motor to be used.

Horizontal slide for top of pillar

Cut 4 pieces of bright mild steel 4 in. long by $\frac{3}{16}$ in. thick, one $1\frac{3}{4}$ in. wide, one $\frac{3}{4}$ in. wide and two at $\frac{1}{2}$ in. wide. Drill the two at $\frac{1}{2}$ in. wide as shown in **Figure 46**, with a No. 37 drill $\frac{3}{16}$ in. from the outside edge, also drill the left-hand one through the side at the

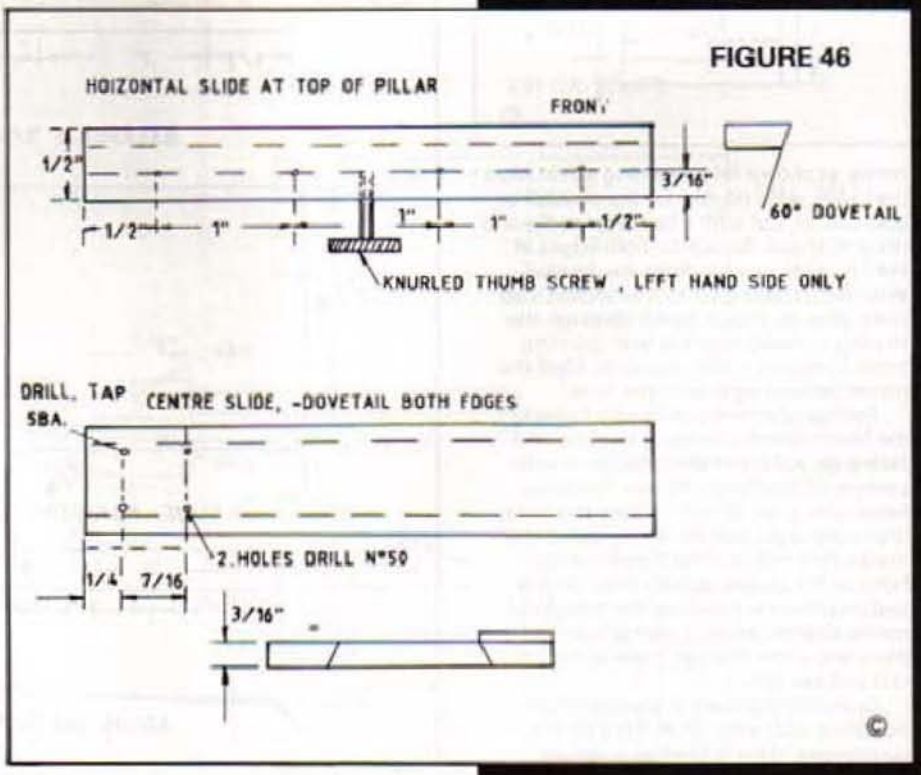

HORIZONTAL SLIDE AT TOP OF PILLAR BASE — FIGURE 47

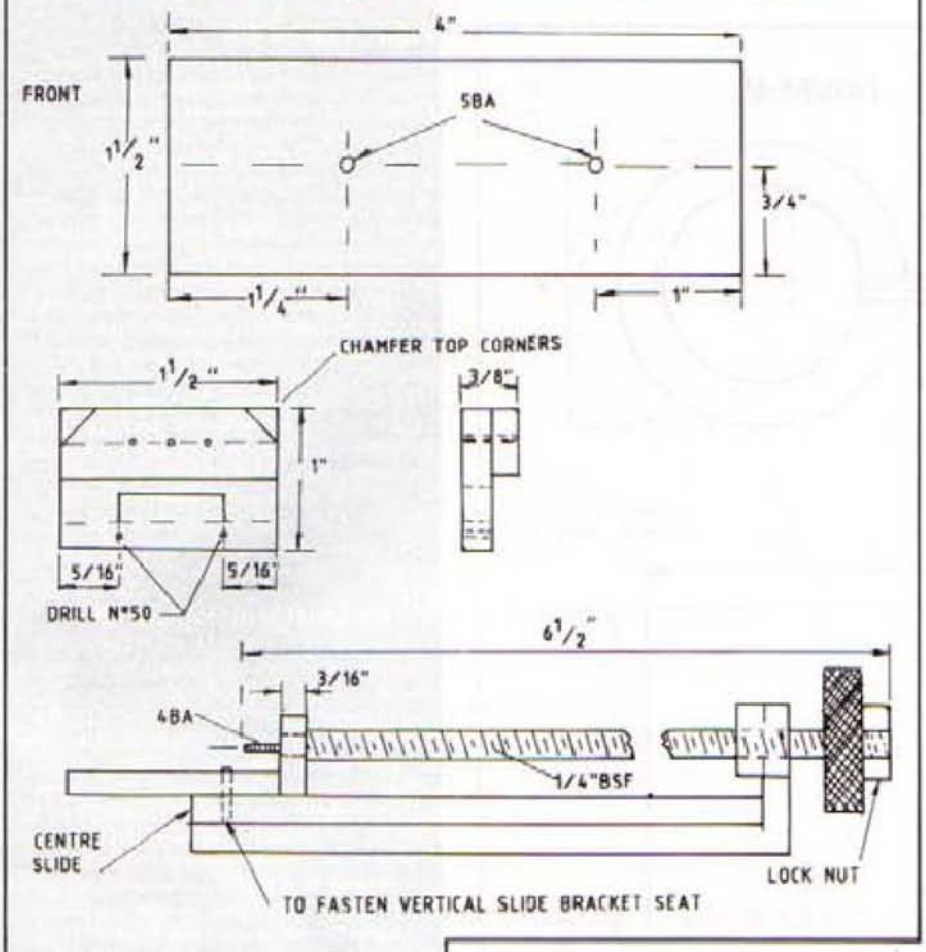

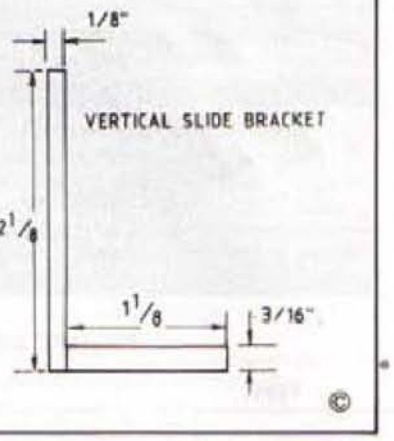

centre as shown for a retaining screw. Mark the inside edge 60 deg. for the dovetail on both pieces. Cut with a bandsaw or file and grind to shape. Repeat on both edges of the ¾ in. wide piece to form the dovetail slide. Before doing so, drill as shown. Use plate glass as a base on which to rub the sloping surfaces together with grinding paste to ensure a nice sliding fit. Mark the pieces left and right from the front.

Position the centre strip with holes to the front centrally on the 1½ in. piece and fasten the left-hand slide alongside with clamps. Drill through the four fastening holes with a No. 37 drill to mark the base, dismantle and carefully centre punch the marks. Drill and tap 5BA. Open out the holes in the sidepiece with a No. 30 drill and countersink. Fasten to the base. With centre slide in position, clamp right-hand piece and mark through holes as before, drill and tap 5BA.

Open out the holes in the right-hand sidepiece with a No. 29 drill but do not countersink. (This is to allow a certain amount of movement in the sidepiece).

Horizontal slide, Figure 47

Cut a piece of bright mild steel 1/16 in. thick to the same length and width as the right-hand slide drilling holes to suit. This goes on the top of the side piece to retain its position when tightened down. Graduate the right-hand slide from the front for 3 in. 1/16 in. as on a rule. Drill a hole with a No. 3 drill from the rear of the 1½ in. base as shown and tap ¼ BSF. Also one 1¼ in. from the front edge.

Main end piece

Take a section of the same material 1½ in. by 1 in. by 1/16 in. Drill 2 holes No. 50 for fastening to the end of the base. Mark out slot to allow passage of centre slide. Drill two ¼ in. holes and connect to form the slot. Cut a section of the same material 1½ in. by ½ in. by 1/16 in. to place on the inside of the main end piece. Drill No. 50 and tap 8BA. Fasten as shown and chamfer the outside edges. Clean and score facing edges, Flux, screw together, and hard solder.

Slide end piece

Use the same material ¾ in. wide by ⅝ in. high by 1/16 in. thick. Place on the top of the centre slide and mark through the No. 50 holes already drilled, being sure that it is square to the centre slide punch marks. Drill No. 50 and tap 8BA. Open out the holes in the slide with No. 43 drill and countersink. Fasten with 8BA screws. Chamfer the bottom edges slightly for slides.

VERTICAL SLIDE — FIGURE 48

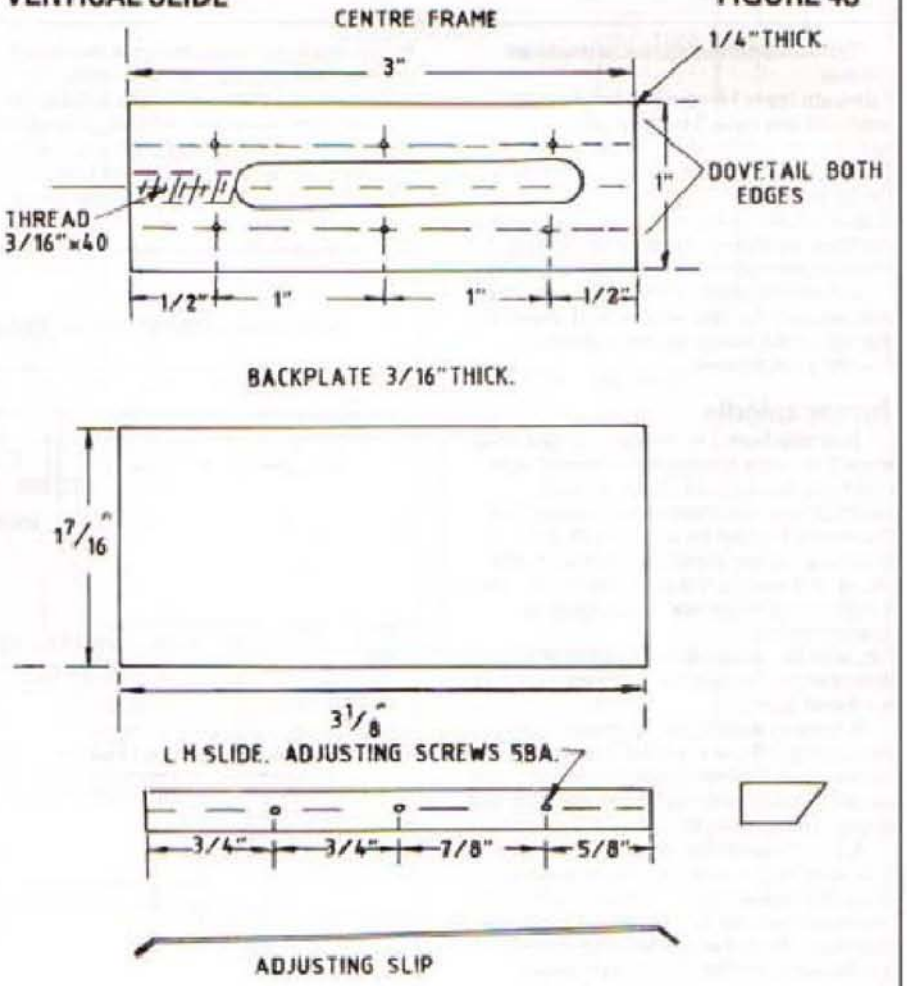

VERTICAL SLIDE ADJUSTING SCREW, TURNING BUTTON AND ENDPIECE FIGURE 49

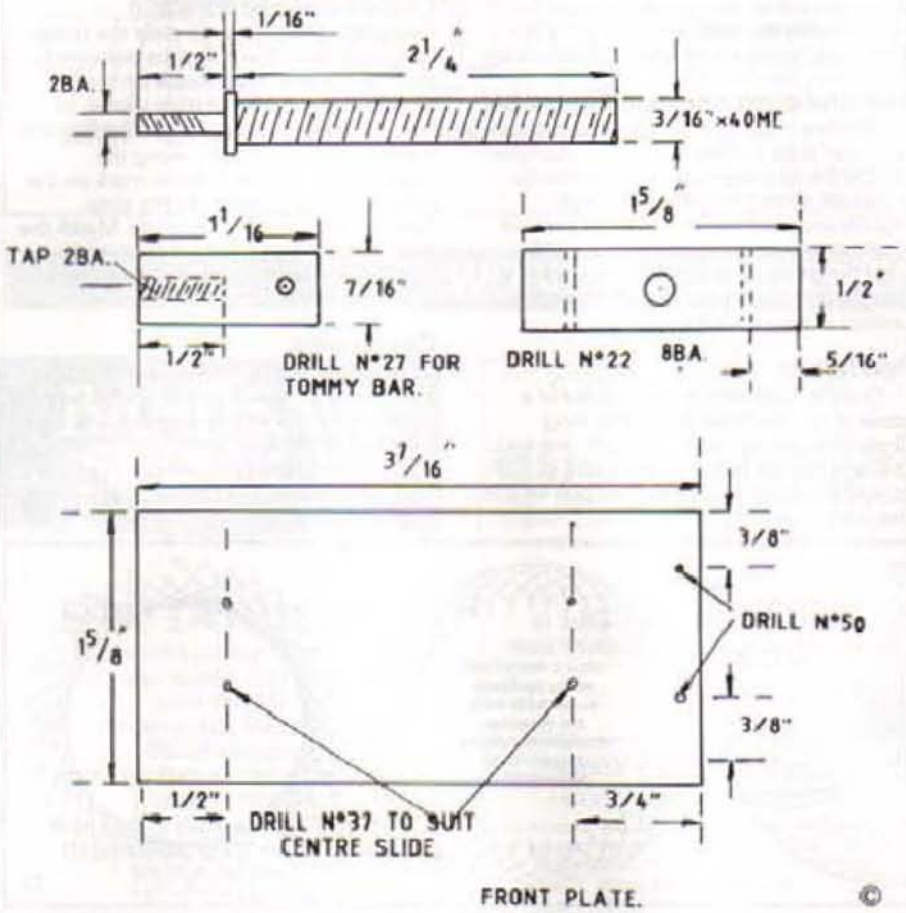

Mark the centre of the main end piece and drill with small drill as shown. Mark through the holes already drilled in the centre slide and drill and tap 8BA. Open out the holes as before.

Screwed adjusting rod ¼ in. BSF, Figure 47

Turn down one end of the 6½ in. rod 5/16 in. and thread 4BA. Turn another 3/16 in. to 3/16 in. diameter. Sharpen the end of the 4 BA screw to a point in the lathe in order to mark the front end piece which should be drilled with a small drill. Screw the rod through the main end piece to line up with the hole in the front. Adjust the hole if necessary with a file to ensure correct alignment and a running fit for the 3/16 in. portion of the rod. When this is done, hard solder the joints. Wash with diluted ammonia to prevent rust setting in later. Turn down the other end of the rod for a length of ½ in. thread 0BA. Knurl a ½ in. length of 1 in. diameter brass and tap centre 0BA. Retain on the rod with a fairly large nut. fasten the other end with a 4BA washer and nut. Be sure the rod is free to turn without friction.

Vertical slide, centre frame, Figure 48

Cut a piece of 1 in . by ¼ in. thick bright mild steel 3 in. long. Drill ¼ in. holes on the centre line ¾ in. from one end, and 5/16 in. from the other end and other holes in between. File to connect forming a slot just over ¼ in. wide. Smooth the surfaces. Drill and tap the hole at the ¾ in. end 5/16 in. by 40. Drill the other holes as shown No. 50. Make the backplate from bright mild steel 1/16 in. thick as **Figure 48**. Cut dovetails on both long edges of centre slide.

Slides for outside, Figure 48

Use a piece of bright mild steel as before 1 in. by 3 in. by ¼ in. thick. Cut a dovetail on both edges. Smooth with grinding paste as on the horizontal slide. Mark the mating faces in order to position correctly later. Cut the piece down the middle to form two sections ¼ in. wide at the top. Drill the left-hand side for adjusting screws as shown. The adjusting slip can be made from a junior hacksaw blade with the teeth ground off and bent outwards at the ends to retain position.

Vertical slide adjusting screw, turning button and end piece, Figure 49

Place a length of hexagon bright mild steel ½ in. across flats in the 3 jaw chuck, turn taper on the end, turn down short length from taper to 3/16 in. diameter. Support with a female centre in tailstock and reduce to a diameter of 3/16 in. a total of 2¾ in. Thread 3/16 in. by 40 TPI, reduce further ¼ in. to ¾ in. diameter and another ½ in. to 2BA size. Part off, reverse in the chuck, and thread a length 3/16 in. to 2BA.

Turning button

Using ½ in. hexagon cross-drill No. 27 5/16 in. from the end. Turn to a diameter of 5/16 in. for a distance of 11/16 in. Part off, reverse in chuck, and drill the centre No. 22 and tap 2BA. Divide the circumference into 25

PEN HOLDER FIGURE 50

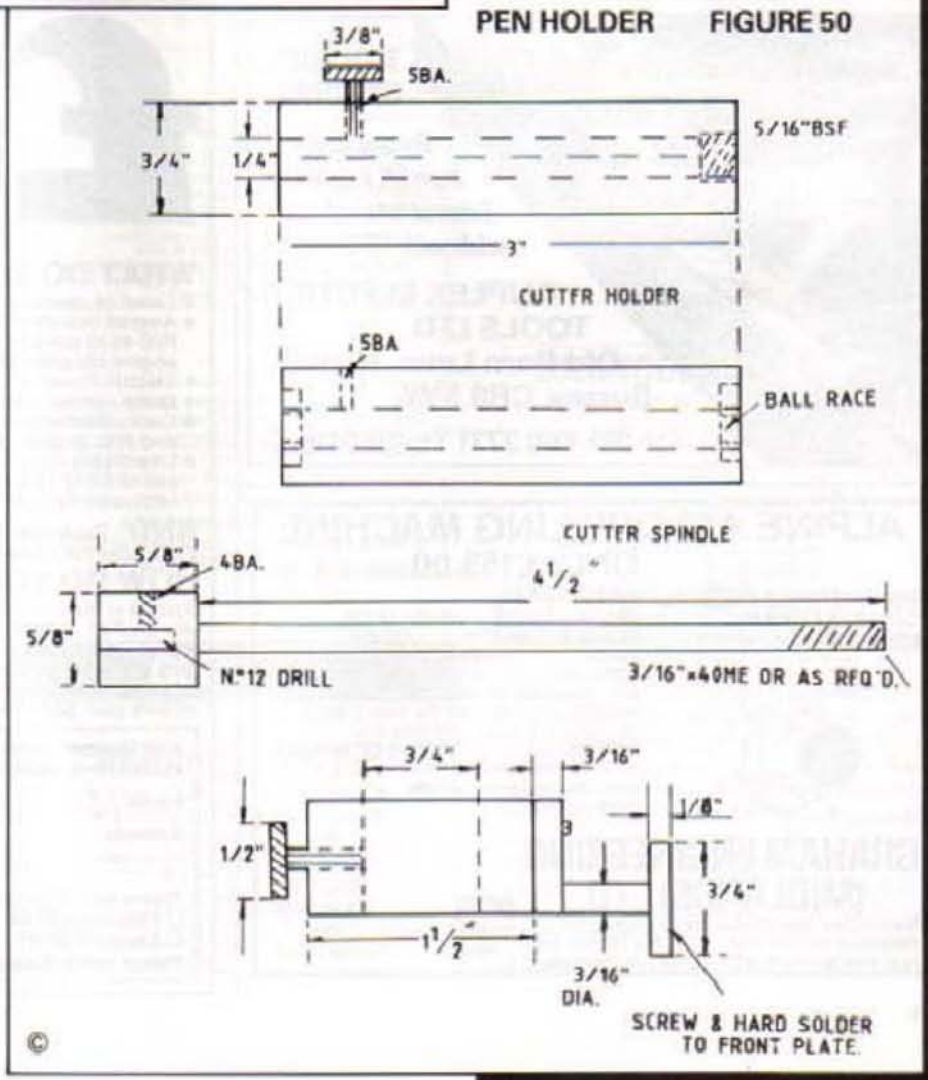

divisions making the first mark longer than the rest. Make the end plate to attach to the top of the back section, as shown in Figure 49, from bright mild steel 3/16 in. thick. Fasten front plate to the centre slide. Graduate in 1/16 in. from the top of the fixed part of the framework.

Pen housing and cutter spindle, Figure 50

Drill a 3 in. length of 3/4 in. diameter brass or bright mild steel 1/4 in. throughout its length. Open out the ends to fit ball races with an outside diameter of 1/2 in. and inside diameter of 3/8 in., also open out a further 1/8 in. to give clearance for the inner bearing of the ball races. These should be a good press fit in the ends of the housing. Drill a cross-hole 1/2 in. from one end of the housing No. 37 and tap 5BA.

Take a 4 3/4 in. length of silver steel 1/2 in. diameter for the cutter spindle. Turn down 3 3/4 in. to a diameter to fit the inner diameter of the ball races, again these should be a good press fit. Turn the centre portion inside the ball races to a slightly smaller diameter to facilitate the movement of the race up to toolholder shoulder. Put the shoulder race on the spindle, grease the races, and fit the spindle housing. Fit the other race, using a little Loctite if necessary.

Pen and cutter holder, Figure 51

Turn the housing from hard brass 1 1/2 in. diameter. Bore out the centre 3/4 in. diameter so that the pen and cutter spindle holder are a nice sliding fit. Flatten one side slightly and hard solder 1/2 in. wide piece of bright mild steel as shown in Figure 51. Treat the other pieces in the same way. Fasten centrally front plate 1 in. from the bottom and hard solder.

Pen holder

Drill 1/4 in. hole through the centre of a piece of 3/4 in. diameter brass 3 in. long. Cross-drill and tap 5BA, 1/2 in. from one end. Drill and tap the hole in other end 5/16 in. BSF to hold small spring. A fine liner pen refill is required.

Now fit the assembled vertical and horizontal slides onto the top of the pillar, screwing tight. Fasten in that position with a screw into the top of the plug. Countersink this screw to clear the centre horizontal slide. It will now be possible to position the pen dead centre on the top faceplate. Put the brass plate shown in Figure 44 onto the bottom of the pillar with the front facing centrally along the baseplate, and put a location mark on the pillar and one to match on the plate. Remove the pillar and the plate. Match the location marks and soft solder the two together. Divisions can be marked on the brass plate if considered necessary.

Conclusion

A little on the lengthy side to describe but readers who make what is after all a complicated piece of equipment will, I am sure, be glad to have as much constructional detail as possible. I am equally sure they will find the end justifies the means.

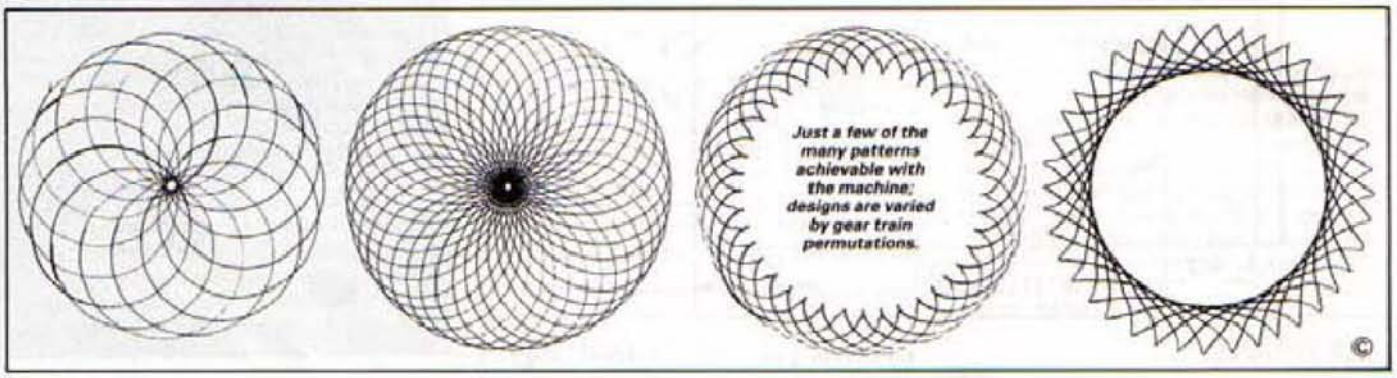

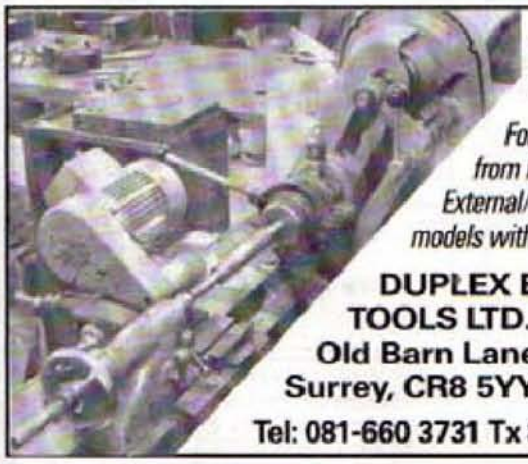

TOOL POST GRINDERS

For any lathe from ML7 upwards External/Internal models with TEFC motors

DUPLEX ELECTRIC TOOLS LTD.
Old Barn Lane, Kenley, Surrey, CR8 5YY.
Tel: 081-660 3731 Tx 8956416 G

ALPINE A13 DRILLING MACHINE

ONLY £155.00 CARRIAGE £10 + VAT (£189.75 TOTAL)

SPECIFICATIONS — BENCH MODEL DRILLING CAPACITY: 5/8" · CHUCK CAPACITY: 5/8" · TAPER OF SPINDLE: 2MT · WEIGHT: 48kg · MOTOR 230v. 1 PHASE: 1/3 HP · NUMBER OF SPEEDS: 12 · SPINDLE SPEEDS: 210-2580 · WORK TABLE SIZE: 11" (Round with 6 slots) · SWING: 12 3/4" · COLUMN DIA.: 2 7/8" · STROKE OF SPINDLE: 3 1/4" · OVERALL HEIGHT: 38" · Max. Dist. Between Spindle Nose to Base: 24"

GRAHAM ENGINEERING (MIDLANDS) LTD.
Roebuck Lane, West Bromwich Nr. Birmingham, B70 6QP
Telephone 021-525 3133 Fax 021-500 6453
ALL PRICES SUBJECT TO VAT & CARRIAGE

RING FOR YOUR OWN 1991 CATALOGUE

£1,000,000

ASP MODELLERS ACCIDENT PROTECTION

WHAT DO YOU GET?

- ★ Cover for operation of all types of models on one single policy
- ★ Aircraft models of all types - Control Line, Free Flight, Jetex and R/C of all types (including Helicopters). The only limitation is on engine capacity; 10cc for F/F and a total of 40cc for CL and R/C
- ★ Electric Power covered
- ★ Boats - power boats up to 40cc, yachts up to 1/4 scale
- ★ Cars - electric and I.C. power circuit and off-road up to 1/4 scale and 40cc engine capacity
- ★ Live Steam - Locomotives (up to 7 1/4 gauge), Traction Engines (up to 3in to 1ft.) and Stationary Engines. Valid Boiler Certificate necessary for Live Steam.

AND - Passenger Liability Cover of up to £1,000,000 for just £1.25 extra for passenger hauling models

HOW DO YOU APPLY?

Just fill in the accompanying form and send it with your cheque to us. The FLY, DRIVE, SAIL or STEAM with confidence!
N.B. Cover is limited to Great Britain, Northern Ireland, the Isle of Man and the Channel Islands. There is a £10.00 excess payable on each and every claim. Cover is effective from the time that we receive your payment.

ASP Reader Services, Argus House, Boundary Way, Hemel Hempstead HP2 7ST Tel: 0442 66551

Name .....

Address .....

.....

Please tick class of insurance required:-
☐ Passenger £7.25
☐ Standard £6.00
Please make cheques payable to ASP